# AI

# Single Key Access Interlock

User Manual - Original Language Version

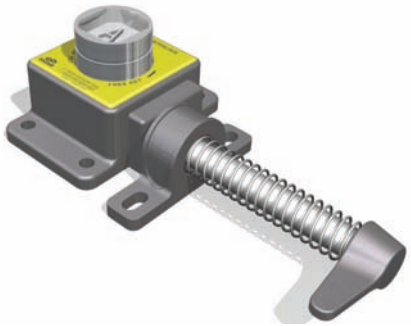

AI-FSS-2

The AI is a single key access interlock ideal for use on hinged doors. The interlock has an open cavity design manufactured in either aluminium alloy/brass or stainless steel, making it ideal for use in harsh or corrosive environments and heavy use. Typical industries using the AI are food, chemical, pharmaceutical, mining, steel and power generation.

## Operation

The Castell single key access interlocks are used in various applications to control part body access to hazardous areas.

### AI single key access interlock (bolt trapped - key free)

1. **Key is free, bolt is trapped**

2. **Insert and turn key, then turn and release bolt**

3. **Key is trapped, bolt is unlocked**

1. **While the key is free, the bolt of the AI is trapped in the mechanism. The door is locked.**
2. **By inserting and turning the key in the Access Interlock, you can release the bolt. This will trap the key in the lock.**
3. **The key stays trapped while the bolt is released and the door is open.**

While every effort has been made to ensure the accuracy of the information provided, no liability can be taken for any errors or omission.
Castell Safety International Limited reserves the right to alter specifications and introduce improvements without prior notice.

## Usage

The AI Access Interlock should be used to allow safe access to potential hazardous and dangerous areas.
The AI Access Interlock should be used on part body access doors where the use of personal safety keys is not essential (to prevent accidental lock in).

The AI Access Interlock is not designed for security purposes, such as a safe or external access to a building.

No hazardous substances were used in the manufacture of this product. The product can be disposed of in standard waste.

## Installation

The housing of the AI access interlock should normally be mounted on the static frame of the guard and the bolt to the sliding or hinged door using suitable fasteners. Fixed bolt bracket is highly tolerant to misaligned guards and should be fitted with suitable fasteners. Please refer to the drawing on page 4 for mounting details for the housing and bolt. The AI interlocks are avalable in Hand 1 and Hand 2 version suitable for left or right hinged doors, respectively. Anti vibration pads should be used on machines that generate a high level of vibration.

IMPORTANT:
The AI Access Interlock should be mounted on the guard using anti-tamper fasteners to prevent unauthorised removal.

The AI Access Interlock must be installed by a competent and qualified person who has read and understood these instructions. Please retain this document in your technical file.

Force required to shear lock bolt is 24KN for both stainless steel and brass interlocks.

## Maintenance

Periodic visual checks should be carried out by the site manager/safety officer.
Do not lubricate lock barrel with oil or grease, use CK Dry Powder Graphite if necessary.

In case of defects beeing detected please contact your nearest Castell Support Department for further actions.
Please see Contact section for contact details.

While every effort has been made to ensure the accuracy of the information provided, no liability can be taken for any errors or omission.
Castell Safety International Limited reserves the right to alter specifications and introduce improvements without prior notice.

## Technical Data

| | |
|---|---|
| **Temperature rating** | Minimum: -40°C [-40°F] ice free for Q & FS Type |
| | Maximum: 107°C [224,6°F] for Q Type/140°C [284°F] for FS Type |
| **Type of mounting** | Surface mount using suitable fasteners (please refer to drawing on page 4 for more details) |
| **Weight** | Brass: 0,8 kg |
| | Stainless steel: 1,0 kg |
| **Material** | Aluminium alloy/brass or stainless steel |
| **MTTF Certification** | Available on request |

## Application

A typical application of the AI Single Key Access Interlock is machine guarding with part body access.

The AI is used as a part of a safety system, which ensures a machine is shut down, before access to the hazardous area is allowed.

The system involves a KS key switch that breaks the machine safety circuit, when the key is removed. The key can then be taken to the AI Access Interlock to enable access to the machine. The machine cannot be restarted until the door is closed, the bolt is replaced and the key is removed and taken to the KS key switch.

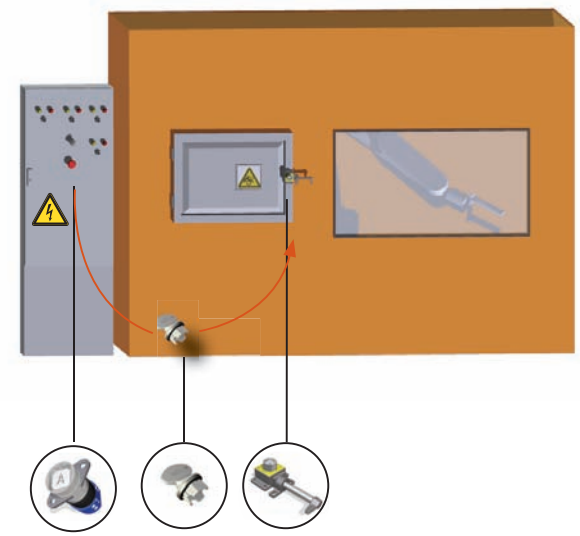


## EC-Declaration

We, the manufacturers, declare that the components, detailed herein and placed on the market, comply with all the essential health and safety requirements applying to them.

Empowered signatory:

Mr T.C. Whelan
Managing Director

While every effort has been made to ensure the accuracy of the information provided, no liability can be taken for any errors or omission.
Castell Safety International Limited reserves the right to alter specifications and introduce improvements without prior notice.

## Drawing

Dimensions:
**in mm**

***Note:*** *For safe mounting, use security screws*

AI, Hand 2

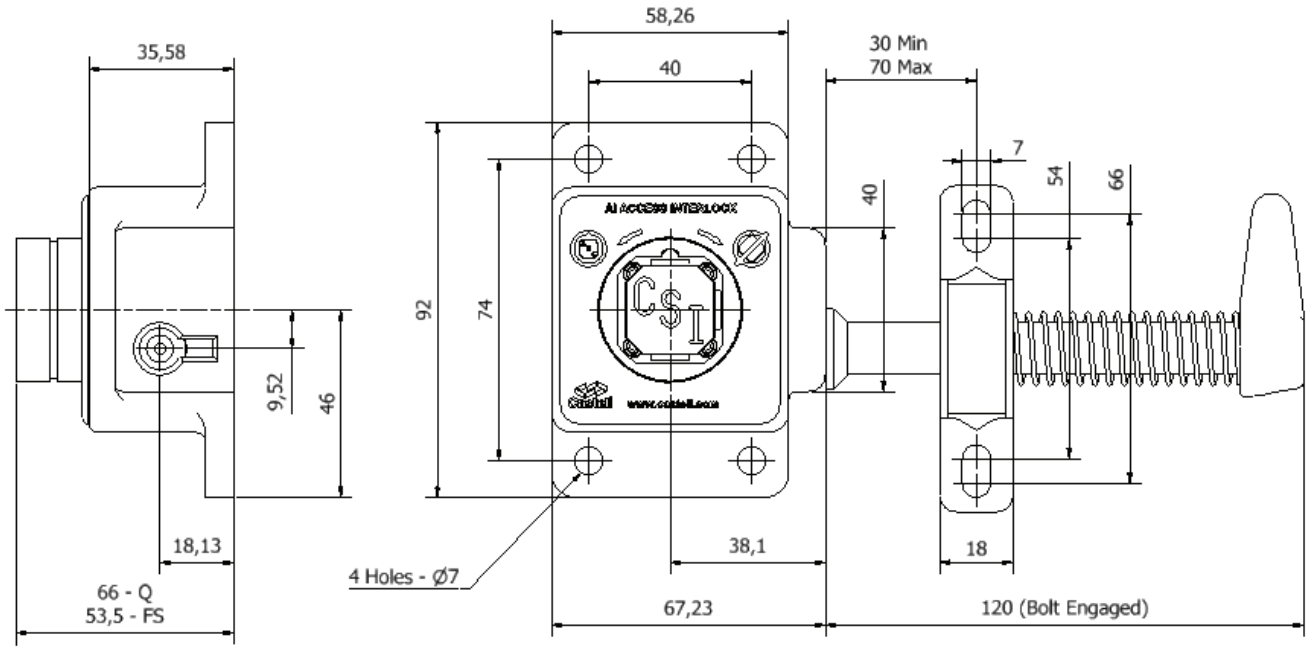


While every effort has been made to ensure the accuracy of the information provided, no liability can be taken for any errors or omission.
Castell Safety International Limited reserves the right to alter specifications and introduce improvements without prior notice.

## Order Information

| | Product Type | | 1 | 2 | | 3 |
|---|---|---|---|---|---|---|
| Part Number | AI | - | | | - | |
| Example | AI | - | FS | AL | - | 1 |

| 4 |
|---|
| ABC |

| | | |
|---|---|---|
| 1 | Lock portion type | FS (1) / Q (1) |
| 2 | Material | AL = Aluminium alloy/brass<br>S = Stainless steel |
| 3 | Handing | 1 = left hinged door (bolt enters left) (2)<br>2 = right hinged door (bolt enters right) (2) |
| 4 | Lock portion symbol | FS (1) up to 3 characters / Q (1) up to 6 characters |

(1) **FS - Lock type** Up to 3 characters **Q - Lock type** Up to 6 characters

(2) **Handing** **1** **2**

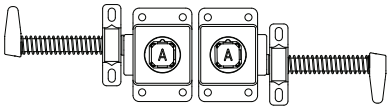

## Accessories

**Special construction available upon enquiry**

| | Product | Part number |
|---|---|---|
| | Flip Cap | FLIP-S |

## Contact Information

Castell Safety International Ltd.
The Castell Building
217 Kingsbury Road
London, England NW9 9PQ

t: +44 (0) 20 8200 1200
f: +44 (0) 20 8905 9378
e: uksales@castell.com

Castell Safety International Ltd.
Oskar-Jäger-Strasse 137
50825 Köln
Germany

t: +49 (0) 221 1649 794
f: +49 (0) 221 1649 795
e: vertrieb@castell.com

Castell Interlocks Inc.
Suite 800
150 N Michigan Avenue,
Chicago, Illinois 60601
USA

t: +1.312.360.1516
f: +1.312.268.5174
e: ussales@castell.com

Castell Safety China
Building 1, No. 123,
Lane 1165, Jindu Road,
Minhang District,
Shanghai 201108, China.

t: +86 21 61519023
f: +86 21 61519030
e: chinasales@castell.com

While every effort has been made to ensure the accuracy of the information provided, no liability can be taken for any errors or omission.
Castell Safety International Limited reserves the right to alter specifications and introduce improvements without prior notice.

# AIE

# Dual Key Access Interlock

User Manual - Original Language Version

AIE-FSS-E-2

The AIE dual key access interlock is suitable for use on hinged and sliding doors. The interlock has an open cavity design and is manufactured in an aluminum alloy or durable stainless steel making it ideal for harsh or corrosive environments where the lock is subject to heavy use. The AIE is available in two options: exchange key and double key.

## Operation

Castell dual key access interlocks are used in various applications to control full body access to hazardous areas.

**AIE dual key access interlock, exchange key condition (bolt trapped - personnel key trapped/isolation key free)**

1. **Side bolt is trapped and the personnel key is trapped, isolation key is free.**

2. **Insert and turn isolation key, then turn and release the personnel key. The side bolt can now be released.**

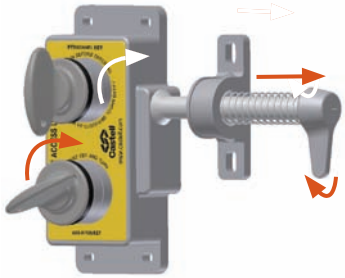

3. **isolation key is trapped, the side bolt and personnel key are free.**

1. **While the isolation key is free and the personnel key trapped in the AIE, the bolt of the AIE is trapped in the mechanism. The door is closed.**
2. **By inserting and turning the isolation key in the access interlock, you can release the personnel key. This traps the isolation key, which enables the release of the side bolt. The personnel key should be taken by the Personnel to the hazardous area.**
3. **The isolation key stays trapped while the bolt is released and the door is open.**

While every effort has been made to ensure the accuracy of the information provided, no liability can be taken for any errors or omission.
Castell Safety International Limited reserves the right to alter specifications and introduce improvements without prior notice.

## Operation

**AIE dual key access interlock, double key conditiion (bolt trapped - both keys are free)**

① **Bolt is trapped, while both keys are free**

② **Insert and turn the keys, then turn and release bolt**

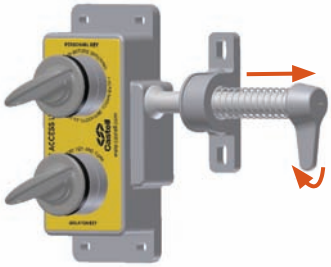

③ **keys are trapped, bolt is unlocked**

1. **While both keys are free, the bolt of the AIE is trapped in the mechanism. The door is locked.**
2. **By inserting and turning the keys in the access interlock, you can release the bolt and open the door.**
3. **Both keys stay trapped while the bolt is released and the door is opened.**

While every effort has been made to ensure the accuracy of the information provided, no liability can be taken for any errors or omission.
Castell Safety International Limited reserves the right to alter specifications and introduce improvements without prior notice.

## Usage

The AIE access interlock should be used to allow safe access to potential hazardous and dangerous areas.
The AIE access interlock should be used on full body access doors where the use of personal safety keys is essential (to prevent accidental lock in).

The AIE access interlock is not designed for security purposes, such as a safe or external access to a building.

No hazardous substances were used in the manufacture of this product. The product can be disposed of in standard waste.

## Installation

The housing of the AIE access interlock should normally be mounted on the static frame of the guard and the bolt to the sliding or hinged door using suitable fasteners. Fixed bolt bracket is highly tolerant to misaligned guards and should be fitted with suitable fasteners. Please refer to the drawing on page 4 for mounting details for the housing and bolt. The AIE interlocks are avalable in Hand 1 and Hand 2 version suitable for left or right hinged doors, respectively. Anti vibration pads should be used on machines that generate a high level of vibration.

IMPORTANT:
The AIE access interlock should be mounted on the guard using anti-tamper fasteners to prevent unauthorised removal.

The AIE access interlock must be installed by a competent and qualified person who has read and understood these instructions. Please retain this document in your technical file.

Force required to shear lock bolt is 24KN for both stainless steel and brass interlocks.

## Maintenance

Periodic visual checks should be carried out by the site manager/safety officer.
Do not lubricate lock barrel with oil or grease, use CK Dry Powder Graphite if necessary.

In case of defects beeing detected please contact your nearest Castell Support Department for further actions.
Please see Contact section for contact details.

While every effort has been made to ensure the accuracy of the information provided, no liability can be taken for any errors or omission.
Castell Safety International Limited reserves the right to alter specifications and introduce improvements without prior notice.

## Technical Data

| | |
|---|---|
| **Temperature rating** | Minimum: -40°C [-40°F] ice free for Q & FS type |
| | Maximum: 107°C [224,6°F] for Q type/140°C [284°F] for FS type or 288°C [550°F] upon request |
| **Type of mounting** | Surface mount using suitable fasteners (please refer to drawing on page 4 for more details) |
| **Weight** | Brass: 0,8 kg |
| | Stainless steel: 1,0 kg |
| **Material** | Aluminium alloy/brass or stainless steel |
| **MTTF Certification** | Available on request |

## Application

A typical application of the AIE dual key Access Interlock is machine guarding with full body access.

The AIE is used as part of a safety system, which ensures a machine is shut down, before access to the hazardous area is allowed.

The system involves a KS key switch for the electrical supply. The removal of the isolation key from the key switch isolates the electrical supply to the machine. This key is taken to the AIE and inserted into the lock. This allows the release of the personnel key and then the sidebolt, which traps the isolation key. The personnel key is then taken into the area by the operative to safeguard themselves against accidental lock in and start up.

The machine cannot be restarted until the personnel key is returned, the bolt is replaced in the AIE and the isolation key is removed and taken to the KS key switch.

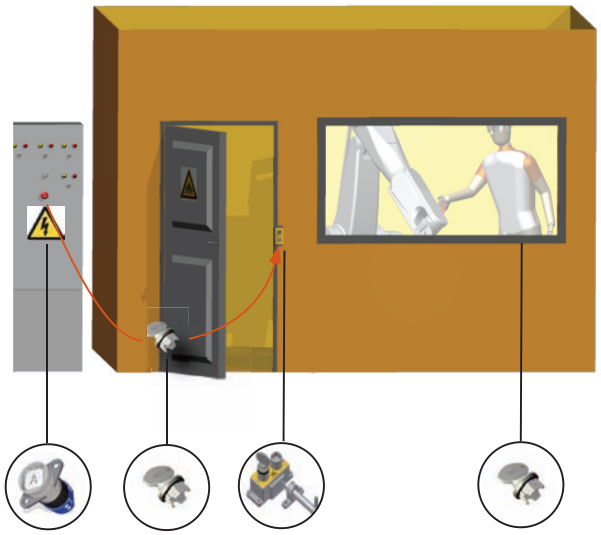

KS key switch AIE access interlock

## EC-Declaration

We, the manufacturers, declare that the components, detailed herein and placed on the market, comply with all the essential health and safety requirements applying to them.

Empowered signatory:

Mr T.C. Whelan
Managing Director

While every effort has been made to ensure the accuracy of the information provided, no liability can be taken for any errors or omission.
Castell Safety International Limited reserves the right to alter specifications and introduce improvements without prior notice.

## Drawing

Dimensions:
**in mm**

***Note:*** *For safe mounting, use security screws*

### AIE, Hand 1

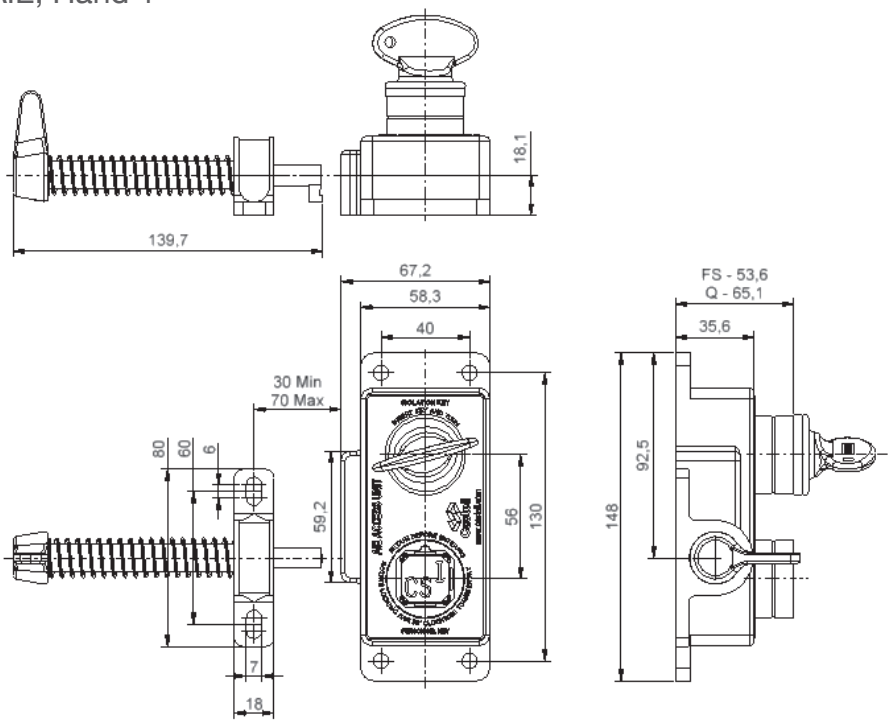


### AIE, Hand 2

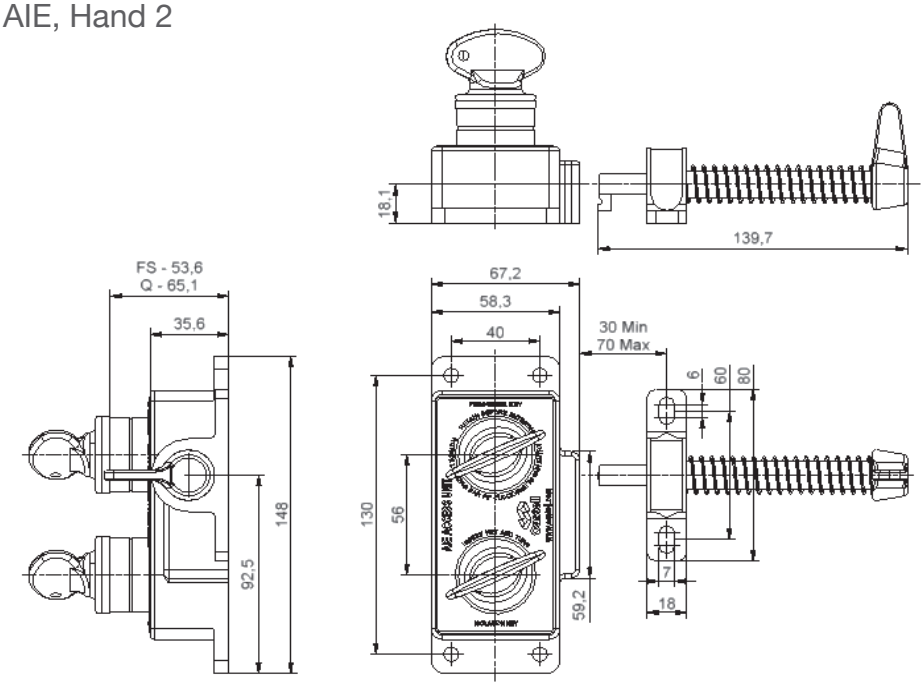


While every effort has been made to ensure the accuracy of the information provided, no liability can be taken for any errors or omission.
Castell Safety International Limited reserves the right to alter specifications and introduce improvements without prior notice.

## Order Information

| | Product Type | 1 | 2 | 3 | 4 |
|---|---|---|---|---|---|
| Part Number | AIE | | | | |
| Example | AIE | FS | AL | E | 1 |

**5**
- A1 — **Isolation Key Symbol** (exchange key condition)
- OR
- **Primary Key Symbol** (double key condition)

**6**
- B1 — **Personnel Key Symbol** (exchange key condition)
- OR
- **Secondary Key Symbol** (double key condition)

| | | |
|---|---|---|
| **1** | **Lock portion type** | FS (1) / Q (1) |
| **2** | **Material** | AL = Aluminium alloy/brass<br>S = Stainless steel |
| **3** | **Key Condition** | E = Exchange key Condition<br>D = Double key Condition |
| **4** | **Handing** | 1 = left hinged door (2)<br>2 = right hinged door (2) |
| **5** | **Lock portion symbol:**<br>Isolation key symbol (for exchange key condition)<br>Primary key symbol (for double key condition, lock next to the bolt) | FS (1) up to 3 characters / Q (1) up to 6 characters |
| **6** | **Lock portion symbol:**<br>Personnel key symbol (for exchange key condition)<br>Secondary key symbol (for double key condition) | FS (1) up to 3 characters / Q (1) up to 6 characters |

(1) **FS - Lock type** Up to 3 characters

**Q - Lock type** Up to 6 characters

(2) **Handing**

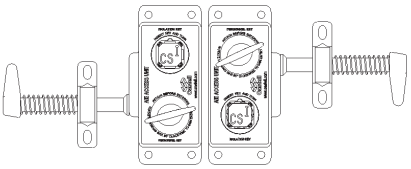


**Special construction available upon enquiry**

## Contact Information

Castell Safety International Ltd.
The Castell Building
217 Kingsbury Road
London, England NW9 9PQ

t: +44 (0) 20 8200 1200
f: +44 (0) 20 8905 9378
e: uksales@castell.com

Castell Safety International Ltd.
Oskar-Jäger-Strasse 137
50825 Köln
Germany

t: +49 (0) 221 1649 794
f: +49 (0) 221 1649 795
vertrieb@castell.com

Castell Interlocks Inc.
Suite 800
150 N Michigan Avenue,
Chicago, Illinois 60601
USA

t: +1.312.360.1516
f: +1.312.268.5174
e: ussales@castell.com

Castell Safety China
Building 1, No. 123,
Lane 1165, Jindu Road,
Minhang District,
Shanghai 201108, China.

t: +86 21 61519023
f: +86 21 61519030
e: chinasales@castell.com

While every effort has been made to ensure the accuracy of the information provided, no liability can be taken for any errors or omission.
Castell Safety International Limited reserves the right to alter specifications and introduce improvements without prior notice.

# AIES

# Dual Key Access Interlock with Safety Switch

User Manual - Original Language Version

AIES-FSS-E-2

The AIES is a dual key access interlock complete with electrical contacts for use on hinged or sliding doors. The AIES contacts can be used to switch off the machine via its control circuitry or to initialise a signal to visual beacons/sounders. The switch is sealed to IP65 with 1N/O 2N/C contacts, it is rated to 6 amps making it ideal for use in cross monitored safety systems. The interlock is manufactured in a durable stainless steel making it ideal for use in harsh or corrosive environments and where the lock is subject to heavy use.

## Operation

The AIES access interlock with safety switch is used for machine isolation in order to protect the hazardous area from full body access while power is on.

**AIES dual key access interlock with safety switch, exchange key condition (bolt trapped - personnel key trapped/ isolation key free)**

① **Power is on, bolt is trapped. Isolation key is free, personnel key is trapped**

② **Insert and turn isolation key to change the switch contacts condition and release the bolt. Then release the personnel key.**

③ **Power is off, isolation key is trapped. Bolt is free and personnel key is free.**

1. **While the power in the hazardous area is on, the sidebolt of the AIES is trapped in the mechanism. The door is locked.**
2. **By inserting and turning the isoltion key, the contact condition is changed switching the power off. The bolt can now be released. This enables the release of the personnel key. The released personnel key should be taken by the personnel to the hazardous area, ensuring the power cannot be turned on as long as the door is opened.**
3. **The switch condition cannot be reversed until the personnel key is returned, the side bolt is trapped nd the isolation key is released.**

While every effort has been made to ensure the accuracy of the information provided, no liability can be taken for any errors or omission.
Castell Safety International Limited reserves the right to alter specifications and introduce improvements without prior notice.

## Operation

### AIES dual key access interlock with safety switch, double key condition (bolt trapped - keys free)

1. Power is on, bolt is trapped. Both keys are free.

2. Insert and turn both keys to change the switch contacts condition and release the bolt.

3. Power is off, both keys are trapped and bolt is free.

1. While the power in the hazardous area is on, the sidebolt of the AIES is trapped in the mechanism. The door is locked. Both keys are free.
2. By inserting and turning both keys, the contact condition changes switching the power off. The bolt can now be released. This trapps the keys.
3. The switch condition cannot be reversed until the sidebolt is trapped in the locking mechanism and the keys are turned and released.

### AIES dual key access interlock with safety switch, double key condition (bolt trapped - keys trapped)

1. Power is on, bolt is trapped. Both keys are trapped.

2. Turn and release both keys to change the switch contact condition and release the bolt.

3. Power is off, bolt is free. Both keys are free.

1. While the power in the hazardous area is on, the sidebolt of the AIES is trapped in the mechanism. The door is locked. Both keys are trapped.
2. By turning and releasing both keys, the contact condition changes switching the power off. The bolt can now be released. Both keys can be released and should be taken by the personnel to the hazardous area.
3. The switch condition cannot be reversed until both keys are returned, the side bolt is trapped and both keys are trapped in the AIES access interlock locking the door.

While every effort has been made to ensure the accuracy of the information provided, no liability can be taken for any errors or omission.
Castell Safety International Limited reserves the right to alter specifications and introduce improvements without prior notice.

## Usage

The AIES access interlock with safety switch is designed to be part of a safety system and is used to isolate the power which then allows to gain access to a hazardous area.

The AIES access interlock is not designed for security purposes.

## Installation

The housing of the AIES access interlock with safety switch should normally be mounted on the static frame of the guard and the bolt to the sliding or hinged door using suitable fasteners. Fixed bolt bracket is highly tolerant to misaligned guards and should be fitted with suitable fasteners. Please refer to the drawing on page 4 for hole details and maximum and minimum mounting distance for the housing and bolt. The AIES interlocks are avalable in Hand 1 and Hand 2 version suitable for left or right hinged doors, respectively. Anti vibration pads should be used on machines that generate a high level of vibration

IMPORTANT:
The AIES access interlock with safety switch should be mounted on the guard using anti-tamper fasteners to prevent unauthorised removal.

The AIES access interlock must be installed by a competent and qualified person who has read and understood these instructions. Please retain this document in your technical file.

Force required to shear lock bolt is 24KN.

## Maintenance

Periodic visual checks should be carried out by the site manager / safety officer.
Do not lubricate lock barrel with oil or grease, use CK Dry Powder Graphite if necessary.

In case of defects being detected please contact your nearest Castell Support Department for further actions.
Please see Contact section for contact details.

While every effort has been made to ensure the accuracy of the information provided, no liability can be taken for any errors or omission.
Castell Safety International Limited reserves the right to alter specifications and introduce improvements without prior notice.

## Drawing

Dimensions:
**in mm**

***Note:*** *For safe mounting, use security screws*

AIES, Hand 1, double key condition

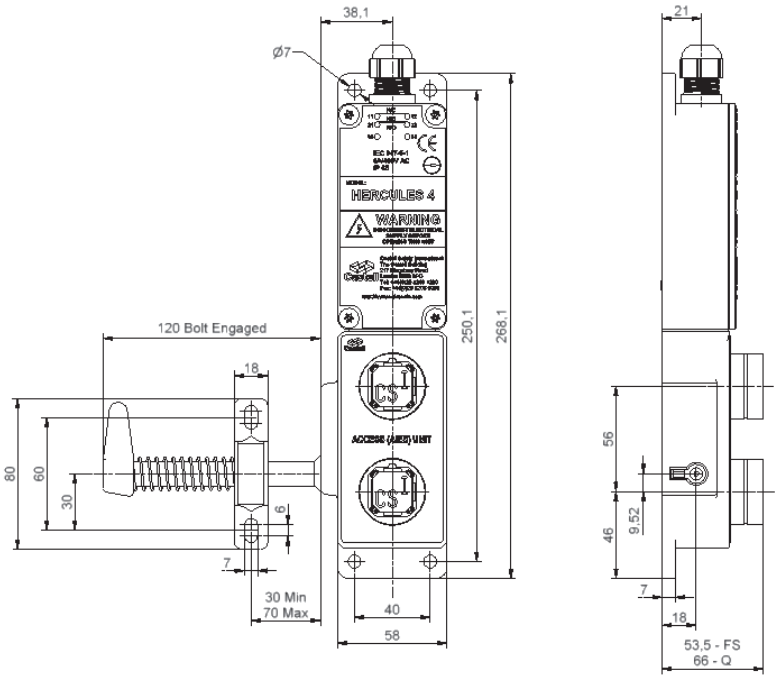


AIES, Hand 2, exchange key condition

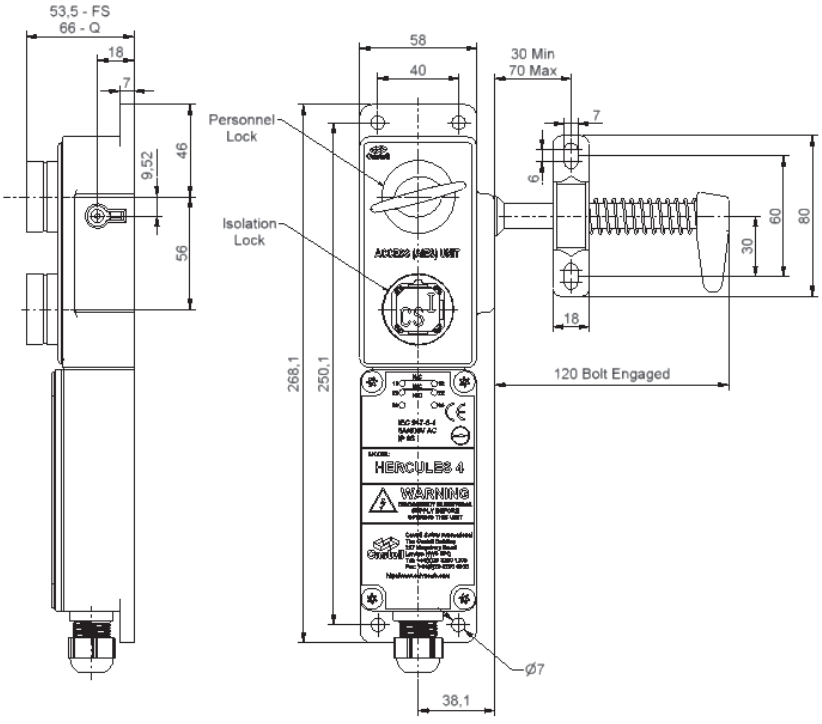


While every effort has been made to ensure the accuracy of the information provided, no liability can be taken for any errors or omission.
Castell Safety International Limited reserves the right to alter specifications and introduce improvements without prior notice.

## Wiring Diagram

***Note:*** *For safe mounting, use security screws*

2NO/1NC

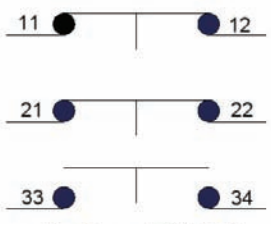


While every effort has been made to ensure the accuracy of the information provided, no liability can be taken for any errors or omission.
Castell Safety International Limited reserves the right to alter specifications and introduce improvements without prior notice.

## Technical Data

| | |
|---|---|
| **Temperature rating** | Ambient temperature of stages: open at 100% Iu/Ith - 55°C during 24 hours with peaks up to 60°C, enclosed at 100% Ithe - 35°C during 24 hours with peaks up to 40°C |
| | Storage temperature: -40°C to 85°C (in case temperature below -5°C no shock load permissible) |
| **Type of mounting** | Surface mount using suitable fasteners (see drawing on page 4 for mounting details) |
| **Weight** | 2,5 kg |
| **Material** | Stainless steel |
| **Power isolation** | 10A |
| **Motor isolation (AC Values)** | 400V AC |
| **Switch approvals** | CE, UL, CSA, IP65 |
| **MTTF Certification** | Available on request |

## Application

A typical application of the AIES Access interlock with Safety switch is machine guarding.

The removal of the key from the AIES, isolates the electrical supply to the machine and allows the removal of the sidebolt and the personnell key. This will trap the isolation key. Therefore the guard can only be opened when the electrical supply has been switched into a safe condition.The personnel key is then taken into the area by the operative to safeguard against accidental lock in or start up or to initialize another part of the process, i.e. switching the machine into a teach mode.

The machine cannot be restarted until the door is closed, the bolt is trapped and the personnel key replaced in the AIES dual key access interlock.

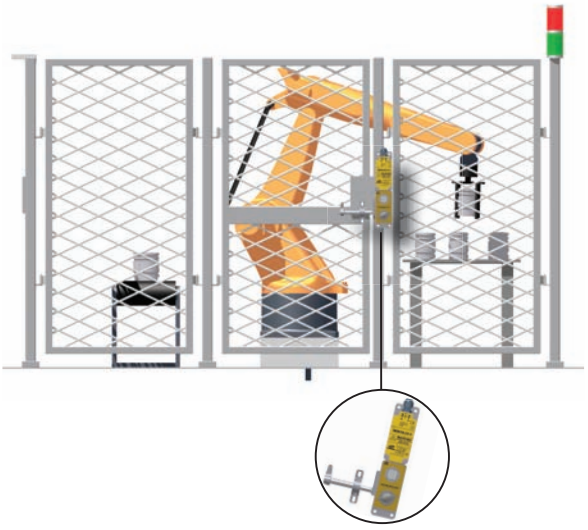

AIES Access interlock with safety switch

## EC-Declaration

We, the manufacturers, declare that the components, detailed herein and placed on the market, comply with all the essential health and safety requirements applying to them.

Empowered signatory:

Mr T.C. Whelan
Managing Director

While every effort has been made to ensure the accuracy of the information provided, no liability can be taken for any errors or omission.
Castell Safety International Limited reserves the right to alter specifications and introduce improvements without prior notice.

## Order Information

| | Product Type | 1 | 2 | 3 | 4* | 5 |
|---|---|---|---|---|---|---|
| Part Number | AIES | | | | | |
| Example | AIES | FS | S | E | KT | 1 |

**6**
- A1 — **Isolation Key Symbol** (exchange key condition)
- OR
- **Primary Key Symbol** (double key condition)

**7**
- B1 — **Personnel Key Symbol** (exchange key condition)
- OR
- **Secondary Key Symbol** (double key condition)

| | | |
|---|---|---|
| **1** | **Lock portion type** | FS (1) / Q (1) |
| **2** | **Material** | S = Stainless steel (standard) |
| **3** | **Key Condition 1** | E = exchange key Condition<br>D = double key Condition |
| **4*** | **Key condition 2 - in bolt trapped condition (applies for double key condition only, see item 3)** | KT = keys are trapped while bolt is trapped<br>KF = keys are free while bolt is trapped |
| **5** | **Handing** | 1 = left hinged door (2)<br>2 = right hinged door (2) |
| **6** | **Lock portion symbol:**<br>Isolation key symbol (for exchange key condition)<br>Primary key symbol (for double key condition, lock next to the bolt) | FS (1) up to 3 characters / Q (1) up to 6 characters |
| **7** | **Lock portion symbol:**<br>Personnel key symbol (for exchange key condition)<br>Secondary key symbol (for double key condition) | FS (1) up to 3 characters / Q (1) up to 6 characters |

(1) **FS - Lock type** Up to 3 characters

**Q - Lock type** Up to 6 characters

(2) **Handing** **1** **2**

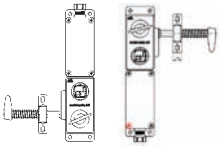

**Special construction available upon enquiry**

## Contact Information

Castell Safety International Ltd.
The Castell Building
217 Kingsbury Road
London, England NW9 9PQ

t: +44 (0) 20 8200 1200
f: +44 (0) 20 8905 9378
e: uksales@castell.com

Castell Safety International Ltd.
Oskar-Jäger-Strasse 137
50825 Köln
Germany

t: +49 (0) 221 1649 794
f: +49 (0) 221 1649 795
vertrieb@castell.com

Castell Interlocks Inc.
Suite 800
150 N Michigan Avenue,
Chicago, Illinois 60601
USA

t: +1.312.360.1516
f: +1.312.268.5174
e: ussales@castell.com

Castell Safety China
Building 1, No. 123,
Lane 1165, Jindu Road,
Minhang District,
Shanghai 201108, China.

t: +86 21 61519023
f: +86 21 61519030
e: chinasales@castell.com

While every effort has been made to ensure the accuracy of the information provided, no liability can be taken for any errors or omission.
Castell Safety International Limited reserves the right to alter specifications and introduce improvements without prior notice.

# AIS

# Access Interlock with Safety Switch

User Manual - Original Language Version

AIS-FSS-KF-2

The AIS or HERCULES is a single key access interlock complete with electrical contacts for use on hinged and sliding doors. The Hercules contacts can be used to switch off the machine via its control circuitry or to initialize a signal to visual beacons/ sounders. The switch is sealed to IP65 with, 1N/O 2N/C contacts, rated to 6 amps making it ideal for use in cross monitored safety systems. The interlock is manufactured in a durable stainless steel making it ideal for use in harsh or corrosive environments and where the lock is subject to heavy use.

## Operation

The Hercules Access Interlock with Safety Switch is used for machine isolation in order to protect the hazardous area from access while power is on.

### AIS (Hercules) access interlock with safety switch: bolt trapped - key trapped condition

① **Power is on, sidebolt is trapped and key is trapped**

② **Turn and release key, to change the switch contact condition and turn and release the bolt**

③ **Power is off, bolt is free and key is free**

1. **While the power in the hazardous area is on, the sidebolt of the AIS is trapped in the mechanism. The door is locked and the key is trapped.**
2. **By turning and releasing the key, the contact condition changes switching the power off. The bolt can now be released. The key should be kept by the personnel as long as the door is opened, ensuring the power cannot be turned on.**
3. **With the sidebolt and key released, the switch condition cannot be reversed.**

### AIS (Hercules) access interlock with safety switch: bolt trapped - key free condition

① **Power is on, sidebolt is trapped and key is free**

② **Insert and turn the key, to change the switch contact condition and release the bolt**

③ **Power is off, bolt is free and key is released**

1. **While the power in the hazardous area is on, the sidebolt of the AIS is trapped in the mechanism. The door is locked and the key is free.**
2. **By inserting and turning the key, the contact condition changes switching the power off. The bolt can now be released. This will trap the key.**
3. **With the sidebolt released and key trapped, the switch condition cannot be reversed.**

While every effort has been made to ensure the accuracy of the information provided, no liability can be taken for any errors or omission.
Castell Safety International Limited reserves the right to alter specifications and introduce improvements without prior notice.

## Usage

The AIS access interlock with safety switch is designed to be part of a safety system and is used to isolate the power which is then allows to gain access to a hazardous area.

The AIS access interlock is not designed for security purposes.

## Installation

The housing of the AIS access interlock with safety switch should normally be mounted on the static frame of the guard and the bolt to the sliding or hinged door using suitable fasteners. Fixed bolt bracket is highly tolerant to misaligned guards and should be fitted with suitable fasteners. Please refer to the drawing on page 4 for hole and mounting details. The AIS interlocks are avalable in Hand 1 and Hand 2 version suitable for left or right hinged doors, respectively. Anti vibration pads should be used on machines that generate a high level of vibration

IMPORTANT:
The AIS access interlock should be mounted on the guard using anti-tamper fasteners to prevent unauthorised removal.

The AIS access interlock must be installed by a competent and qualified person who has read and understood these instructions. Please retain this document in your technical file.

Force required to shear lock bolt is 24KN.

## Maintenance

Periodic visual checks should be carried out by the site manager / safety officer.
Do not lubricate lock barrel with oil or grease, use CK Dry Powder Graphite if necessary.

In case of defects being detected please contact your nearest Castell Support Department for further actions.
Please see Contact section for contact details.

While every effort has been made to ensure the accuracy of the information provided, no liability can be taken for any errors or omission.
Castell Safety International Limited reserves the right to alter specifications and introduce improvements without prior notice.

## Technical Data

| | |
|---|---|
| **Temperature rating** | Ambient temperature of stages: open at 100% Iu/Ith - 55°C during 24 hours with peaks up to 60°C, enclosed at 100% Ithe - 35°C during 24 hours with peaks up to 40°C |
| | Storage temperature: -40°C to 85°C (in case temperature below -5°C no shock load permissible) |
| **Type of mounting** | Surface mount using suitable fasteners (see drawing on page 4 for mounting details) |
| **Weight** | 2,5 kg |
| **Material** | Stainless steel |
| **Power isolation** | 10A |
| **Motor Isolation (AC Values)** | 400V AC |
| **Switch approvals** | CE, UL, CSA, IP65 |
| **MTTF Certification** | Available on request |

## Application

The Castell Hercules (AIS) access interlock with safety switch is used as apart of a safety system, typically in machine guarding applications.

The removal of the key from the AIS, isolates the electrical supply to the machine and allows the removal of the sidebolt. Therefore the guard can only be opened when the electrical supply has been switched into a safe condition.

This key is then taken into the area by the operative to safeguard against accidental lock in or start up or to initialize another part of the process, i.e. switching the machine into a teach mode.

The machine cannot be restarted until the door is closed, the bolt is trapped in the AIS access interlock and the key is replaced.

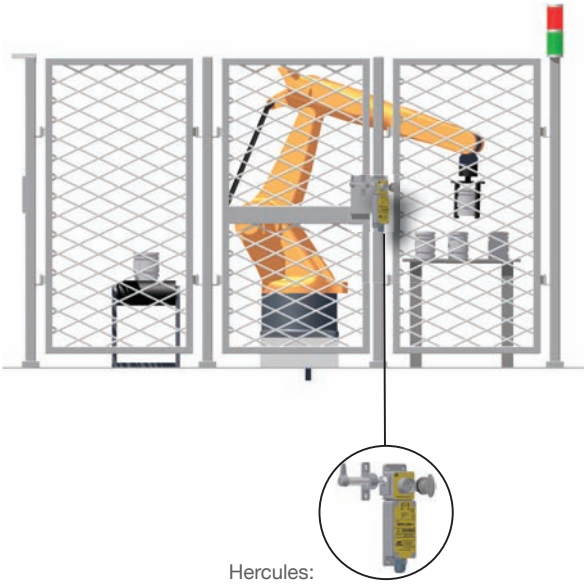

Hercules:
AIS access interlock with safety switch

## EC-Declaration

We, the manufacturers, declare that the components, detailed herein and placed on the market, comply with all the essential health and safety requirements applying to them.

Empowered signatory:

Mr T.C. Whelan
Managing Director

While every effort has been made to ensure the accuracy of the information provided, no liability can be taken for any errors or omission.
Castell Safety International Limited reserves the right to alter specifications and introduce improvements without prior notice.

## Drawing

Dimensions:
**in mm**

***Note:*** *For safe mounting, use security screws*

### AIS, Hand 1, key free - bolt trapped

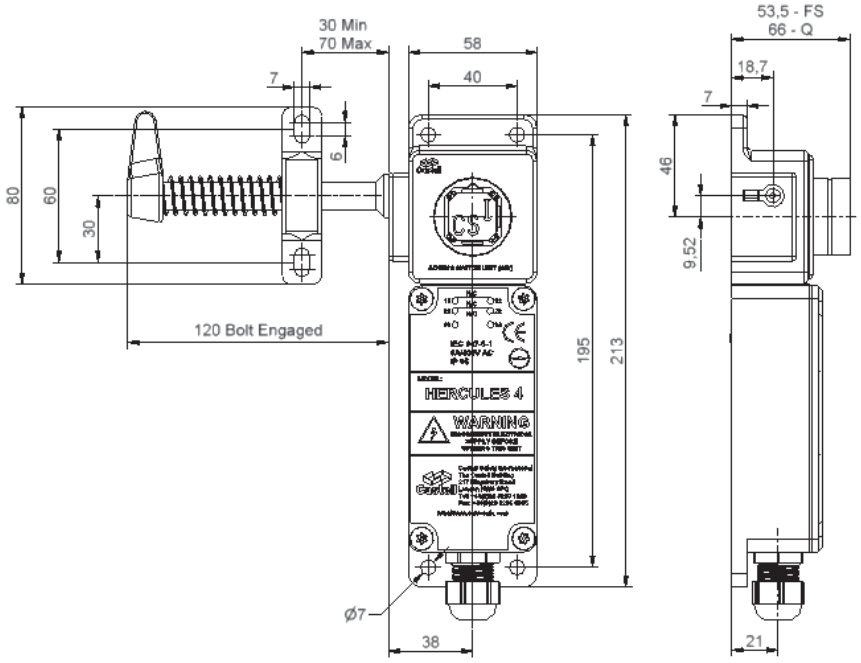


### AIS, Hand 2, key free - bolt trapped

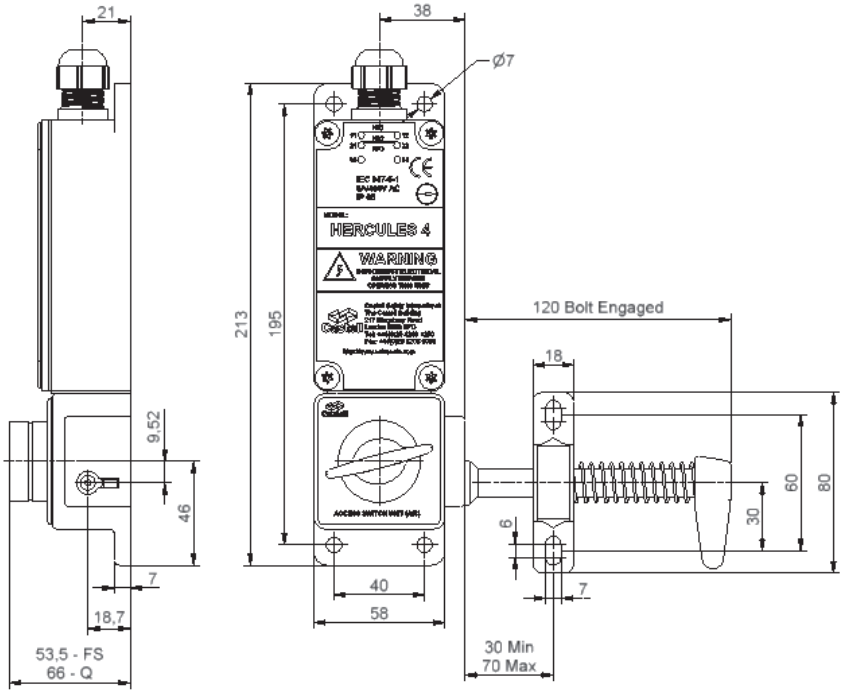


While every effort has been made to ensure the accuracy of the information provided, no liability can be taken for any errors or omission.
Castell Safety International Limited reserves the right to alter specifications and introduce improvements without prior notice.

## Wiring Diagram

2 NO/1NC

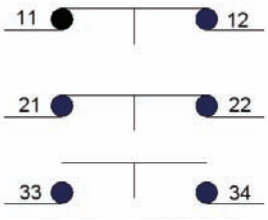


While every effort has been made to ensure the accuracy of the information provided, no liability can be taken for any errors or omission.
Castell Safety International Limited reserves the right to alter specifications and introduce improvements without prior notice.

## Order Information

| | Product Type | 1 | 2 | 3 | 4 | 5 |
|---|---|---|---|---|---|---|
| Part Number | AIS | - | - | - | - | |
| Example | AIS | - FS | S | - KT | - 1 | ABC |

| | | |
|---|---|---|
| 1 | **Lock portion type** | FS (1) / Q (1) |
| 2 | **Material** | S = Stainless steel (standard) |
| 3 | **Condition (by bolt trapped)** | KT = key trapped while bolt trapped<br>KF = key free while bolt trapped |
| 4 | **Handing** | 1 = left hinged door (bolt enters left) (2)<br>2 = right hinged door (bolt enters right) (2) |
| 5 | **Lock portion symbol** | FS (1) up to 3 characters / Q (1) up to 6 characters |

(1) **FS - Lock type** Up to 3 characters

**Q - Lock type** Up to 6 characters

(2) **Handing** **1** **2**

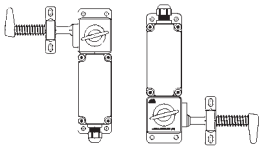

**Special construction available upon enquiry**

## Accessories

| | Product | Part number |
|---|---|---|
| | Flip Cap | FLIP-S |

## Contact Information

Castell Safety International Ltd.
The Castell Building
217 Kingsbury Road
London, England NW9 9PQ

t: +44 (0) 20 8200 1200
f: +44 (0) 20 8905 9378
e: uksales@castell.com

Castell Safety International Ltd.
Oskar-Jäger-Strasse 137
50825 Köln
Germany

t: +49 (0) 221 1649 794
f: +49 (0) 221 1649 795
e: vertrieb@castell.com

Castell Interlocks Inc.
Suite 800
150 N Michigan Avenue,
Chicago, Illinois 60601
USA

t: +1.312.360.1516
f: +1.312.268.5174
e: ussales@castell.com

Castell Safety China
Building 1, No. 123,
Lane 1165, Jindu Road,
Minhang District,
Shanghai 201108, China.

t: +86 21 61519023
f: +86 21 61519030
e: chinasales@castell.com

While every effort has been made to ensure the accuracy of the information provided, no liability can be taken for any errors or omission.
Castell Safety International Limited reserves the right to alter specifications and introduce improvements without prior notice.

# B

# Key Exchange Box

User Manual - Original Language Version

B-FSB-H-1/3

The B key exchange box is designed to enable the sequential release of keys (maximum 5) by the insertion of one or more initial key(s). The need for this type of product usually arises when there are multiple access points to the hazardous area. The unit will generally be the link between the isolation locks and the access products. The product is supplied in an enclosure suitable for surface or panel mounting, and is available in different configurations of locks.

## Operation

Castell Key Exchange Boxes are used in various applications to control multi-door access to hazardous areas.

**B key exchange box, horizontal mount (1 key free - 2 keys trapped)**

① **1 key free, 3 keys trapped**

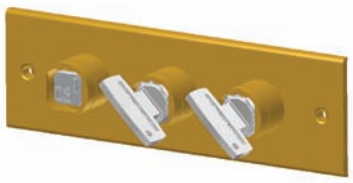

② **Insert and turn free key, then turn and release trapped keys in a sequence**

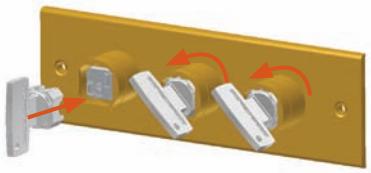

③ **1 key is trapped, 3 keys released**

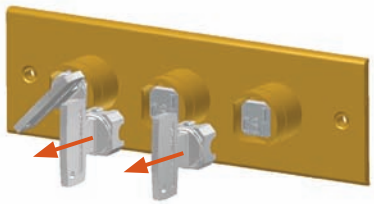

1. **While 1 key is free which is usually used in power isolation, 2 keys are trapped.**

2. **By inserting and turning the free key in the B key exchange box, you can sequentially release trapped keys. The released keys can be used in the access door locks to gain access to the hazardous area.**

3. **The inserted key stays trapped until all released keys are returned to their original position.**

**The B key exchange box is available in different combinations of free and trapped keys and also in a vertical mounting version.**

While every effort has been made to ensure the accuracy of the information provided, no liability can be taken for any errors or omission.
Castell Safety International Limited reserves the right to alter specifications and introduce improvements without prior notice.

## Usage

B key exchange boxes should be used to allow a safe access to potential hazardous and dangerous areas with one or more access points.

The B key exchange box is not designed for security purposes, such as a safe or external access to a building.

No hazardous substances were used in the manufacture of this product. The product can be disposed of in standard waste.

## Installation

The B key exchange box should normally be mounted on the static frame using suitable fasteners. Please refer to the drawing on page 4 for maximum and minimum mounting distance.The B key exchange boxes are avalable in horizontal and vertical mounting versions. Anti vibration pads should be used on machines that generate a high level of vibration

IMPORTANT:
The B key exchange box should be mounted using anti-tamper fasteners to prevent unauthorised removal.

The B key exchange box must be installed by a competent and qualified person who has read and understood these instructions. Please retain this document in your technical file.

## Maintenance

Periodic visual checks should be carried out by the site manager/safety officer.
Do not lubricate lock barrel with oil or grease, use CK Dry Powder Graphite if necessary.

In case of defects being detected please contact your nearest Castell Support Department for further actions.
Please see Contact section for contact details.

While every effort has been made to ensure the accuracy of the information provided, no liability can be taken for any errors or omission.
Castell Safety International Limited reserves the right to alter specifications and introduce improvements without prior notice.

## Technical Data

| | |
|---|---|
| **Temperature rating** | Minimum: -40°C [-40°F] ice free for Q & FS type |
| | Maximum: 107°C [224,6°F] for Q type/140°C [284°F] for FS type or 288°C [550°F] upon request |
| **Type of mounting** | Panel mount using suitable fasteners (please refer to drawing on page 4 for more details) |
| **Weight** | Brass: 1 kg for 2 lock oprtions, add 0,5 kg per additional portion |
| | Stainless steel: 1 kg for 2 lock oprtions, add 0,5 kg per additional portion |
| **Material** | Brass or stainless steel |
| **MTTF Certification** | Available on request |

## Application

A typical application of the B key exchange box is machine guarding with one or more access points to the hazardous area.

The B key exchange box is used as a part of a safety system, which ensures a machine is shut down, before access to the hazardous area is allowed. The system involves a KS key switch for the electrical supply and typically more than one AIE access interlocks for full body access.

The removal of the isolation key from the key switch isolates the electrical supply to the machine. This key is taken to the B key exchange box to release the trapped keys. The released keys are used to gain access through the AIE door interlocks.

The machine cannot be restarted until all keys are returned to the key exchange box and the power isolation key is removed and replaced in the KS key switch.

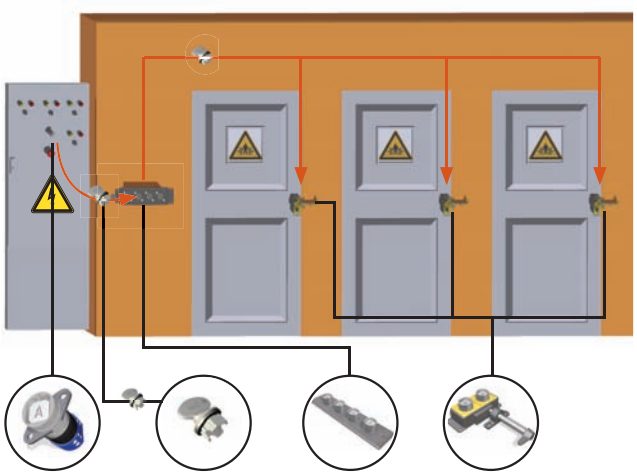

## EC-Declaration

We, the manufacturers, declare that the components, detailed herein and placed on the market, comply with all the essential health and safety requirements applying to them.

Empowered signatory:

Mr T.C. Whelan
Managing Director

While every effort has been made to ensure the accuracy of the information provided, no liability can be taken for any errors or omission.
Castell Safety International Limited reserves the right to alter specifications and introduce improvements without prior notice.

## Drawing

Dimensions:
**in mm**

***Note:*** *For safe mounting, use security screws*

B key exchange box, horizontal mount

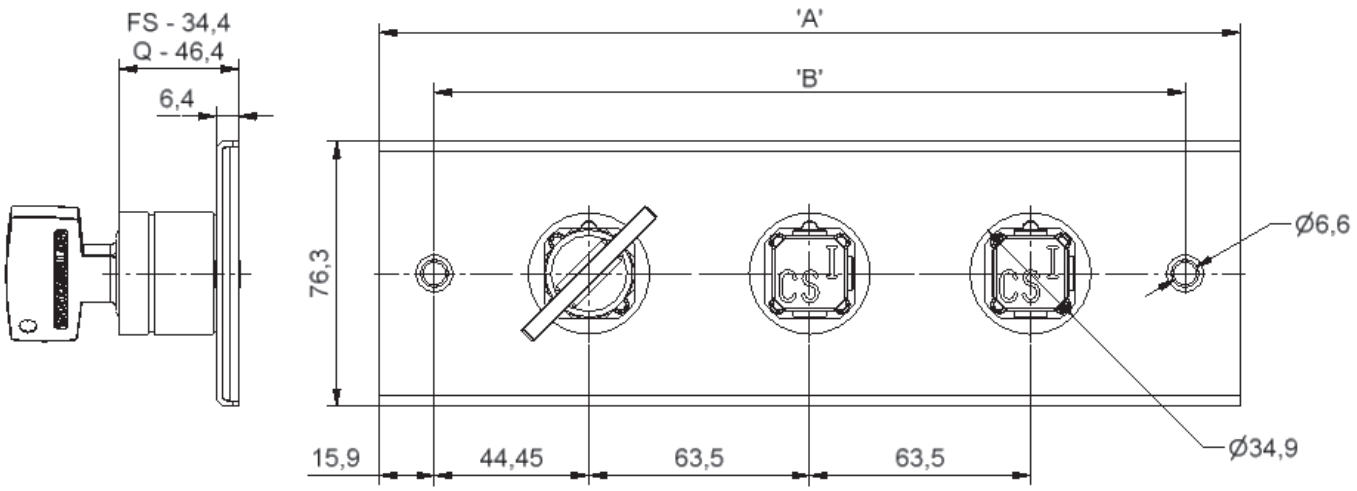


While every effort has been made to ensure the accuracy of the information provided, no liability can be taken for any errors or omission.
Castell Safety International Limited reserves the right to alter specifications and introduce improvements without prior notice.

# Key Exchange Box

User Manual - Original Language Version

## Order Information

| | Product Type | 1 | 2 | 3 | 4 | 5 |
|---|---|---|---|---|---|---|
| Part Number | B | - | | - | - | - |
| Example | B | - FS | B | - H | - 1 | / 3 |

| 6 | |
|---|---|
| A | Free Key Symbol(s) |

| 7 | |
|---|---|
| B1 | End Key Symbol(s) |

| | | |
|---|---|---|
| 1 | **Lock portion type** | FS (1) / Q (1) |
| 2 | **Material** | B = Brass |
| 3 | **Mounting** | H = Horizontal<br>V = Vertical |
| 4 | **Number of Free Keys** | please specify |
| 5 | **Number of Trapepd Keys** | please specify |
| 6 | **Lock portion symbol(s) - Free Key(s), all to be advised separately** | FS (1) up to 3 characters / Q (1) up to 6 characters |
| 7 | **Lock portion symbol(s) - Trapped Key(s), all to be advised separately** | FS (1) up to 3 characters / Q (1) up to 6 characters |

(1) **FS - Lock type** Up to 3 characters **Q - Lock type** Up to 6 characters

**Special construction available upon enquiry**

## Accessories

| | Product | Part number |
|---|---|---|
| | Flip Cap | FLIP-S |

## Contact Information


Castell Safety International Ltd.
The Castell Building
217 Kingsbury Road
London, England NW9 9PQ

t: +44 (0) 20 8200 1200
f: +44 (0) 20 8905 9378
e: uksales@castell.com

Castell Safety International Ltd.
Oskar-Jäger-Strasse 137
50825 Köln
Germany

t: +49 (0) 221 1649 794
f: +49 (0) 221 1649 795
e: vertrieb@castell.com

Castell Interlocks Inc.
Suite 800
150 N Michigan Avenue,
Chicago, Illinois 60601
USA

t: +1.312.360.1516
f: +1.312.268.5174
e: ussales@castell.com

Castell Safety China
Building 1, No. 123,
Lane 1165, Jindu Road,
Minhang District,
Shanghai 201108, China.

t: +86 21 61519023
f: +86 21 61519030
e: chinasales@castell.com


While every effort has been made to ensure the accuracy of the information provided, no liability can be taken for any errors or omission.
Castell Safety International Limited reserves the right to alter specifications and introduce improvements without prior notice.

# BD

# Multi Key Panel Door Interlock

User Manual - Original Language Version

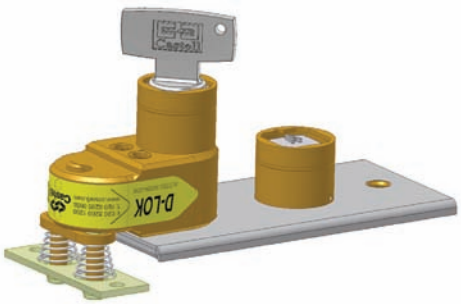

BD-FSB-F-1S-RE-MS-4

The BD Lock is a two part access interlock comprising of a main body and catch complete with secondary lock portions. The catch is available in two options, one suited to well aligned doors, the other suited to poor, mis-aligned doors. The lock is ideally suited for use on light duty panel doors in dry, non-corrosive environments where the lock is subject to light to medium use. Typical industries using the BD Lock are Control Panel Builders, HV and LV Switchgear and the food industry. The D lock is available as F (figure) or Q style of lock portions.The lock is manufactured in brass or stainless steel making it ideal for use in harsh or corrosive environments.

## Operation

The BD lock range is used for interlocking electrical control cubicles and distribution panels.

### BD multi key panel door interlock, exchange key condition

1. **Key A is free, while key B is trapped and the catch is trapped.**
2. **Insert and turn key A, then turn key B to release catch and then release key B.**
3. **Key B is free, key A is trapped while catch is released.**

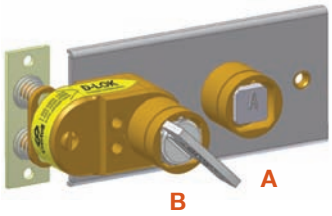


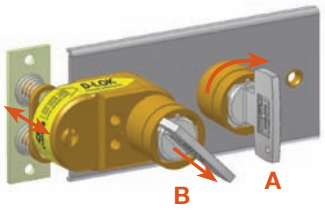


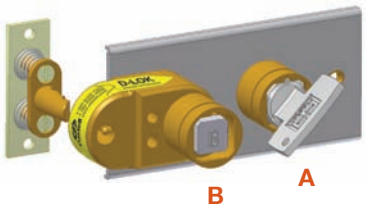


1. **While the catch is trapped in the mechanism, key B is trapped and key A is free. The door is locked closed through the trapped catch.**
2. **Inserting and turning key A in the bolt interlock enables the release of key B and the release of the catch. This will trap key A into the lock.**
3. **Key B is used as the personnel key and taken to the machine area. Key A stays trapped as long the catch is released and key B is free.**

The BD panel door interlock is available with as rear or front entry mounted catch.
The catch is available as standard catch for well aligned doors or as MS catch for misaligned doors.

While every effort has been made to ensure the accuracy of the information provided, no liability can be taken for any errors or omission.
Castell Safety International Limited reserves the right to alter specifications and introduce improvements without prior notice.

## Operation

The BD lock range is used for interlocking electrical control cubicles and distribution panels.

**BD multi key panel door interlock, double key condition**

① **Both keys, A and B are free, catch is trapped.**

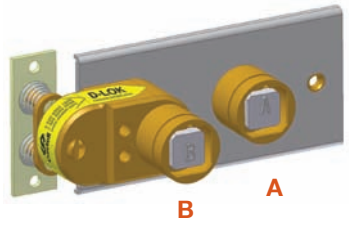


② **Insert and turn both keys to release catch.**

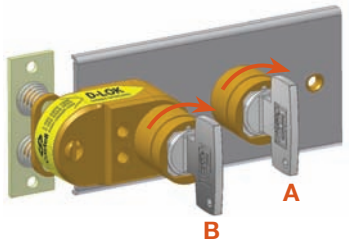


③ **Keys are trapped, catch is released.**

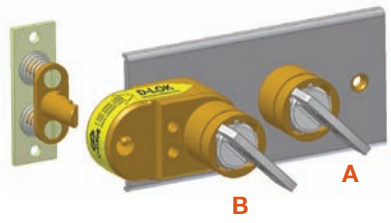


1. **While the catch is trapped, both keys A and B are free. The door is locked closed through the trapped catch.**
2. **Inserting and turning both keys in the BD bolt interlock enables you to release the catch unlocking the door. This will trap both keys into the lock.**
3. **The keys stay trapped as long as the catch is released.**

The BD panel door interlock is available with as rear or front entry mounted catch.
The catch is available as standard catch for well aligned doors or as MS catch for misaligned doors.

While every effort has been made to ensure the accuracy of the information provided, no liability can be taken for any errors or omission.
Castell Safety International Limited reserves the right to alter specifications and introduce improvements without prior notice.

## Usage

The BD panel door interlock should be used for interlocking electrical control cubicles and distribution panels.

The BD lock is not designed for security purposes, such as a safe or external access to a building.

No hazardous substances were used in the manufacture of this product. The product can be disposed of in standard waste.

## Installation

The housing of the BD panel door interlock should normally be mounted to a panel using suitable fasteners (please refer to drawing on page 4 for more details).

IMPORTANT:
The interlock should be mounted using anti-tamper fasteners to prevent unauthorised removal.

The D Panel Door Interlock must be installed by a competent and qualified person who has read and understood these instructions. Please retain this document in your technical file.

## Maintenance

Periodic visual checks should be carried out by the site manager / safety officer.
Do not lubricate lock barrel with oil or grease, use CK Dry Powder Graphite if necessary.

In case of defects beeing detected please contact your nearest Castell Support Department for further actions.
Please see Contact section for contact details.

While every effort has been made to ensure the accuracy of the information provided, no liability can be taken for any errors or omission.
Castell Safety International Limited reserves the right to alter specifications and introduce improvements without prior notice.

## Technical Data

| | |
|---|---|
| **Temperature rating** | Minimum: -40°C [-40°F] ice free for Q & F Type |
| | Maximum: 107°C [224,6°F] for Q Type/140°C [284°F] for F Type |
| **Type of mounting** | Surface mount using suitable fasteners (please refer to drawing on page 4 for more details) |
| **Weight** | 1,2 kg |
| **Material** | Brass/Stainless steel |
| **MTTF Certification** | Available on request |

## Application

Castell BD multi key panel door interlocks are used as a part of a safety system, typically in machine guarding applications as in the below example.

The power supply to the system is switched on and the access door to the hazardous area is locked closed.

The removal of the isolation key in the KSS20, changes the switch contacts provided for electrical supply to the electrical supply to the LV panel from closed to opened. This key is then used to unlock the door by inserting key in the BD panel door interlock and releasing the trapped personnel key and then the catch. This will trap the isolation key in the BD interlock. The release key is taken by the personnel to the machine area.

The power cannot be switched on until the personnel key is returned, the door is closed, the catch is trapped in the BD panel door interlock and the isolation key returned to the KSS20.

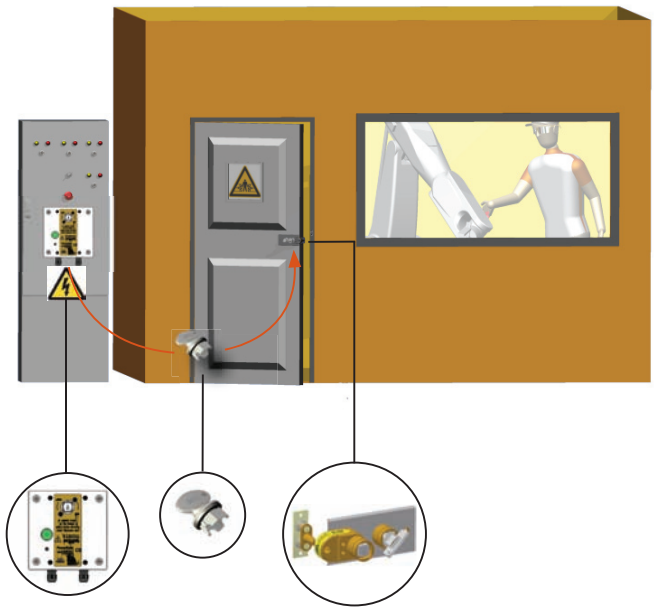

KSS20 D Panel Door Interlock

## EC-Declaration

We, the manufacturers, declare that the components, detailed herein and placed on the market, comply with all the essential health and safety requirements applying to them.

Empowered signatory:

Mr T.C. Whelan
Managing Director

While every effort has been made to ensure the accuracy of the information provided, no liability can be taken for any errors or omission.
Castell Safety International Limited reserves the right to alter specifications and introduce improvements without prior notice.

## Drawing

Dimensions:
**in mm**

***Note:*** *For safe mounting, use security screws*

BD, front of board mount, exchange key condition, form 1

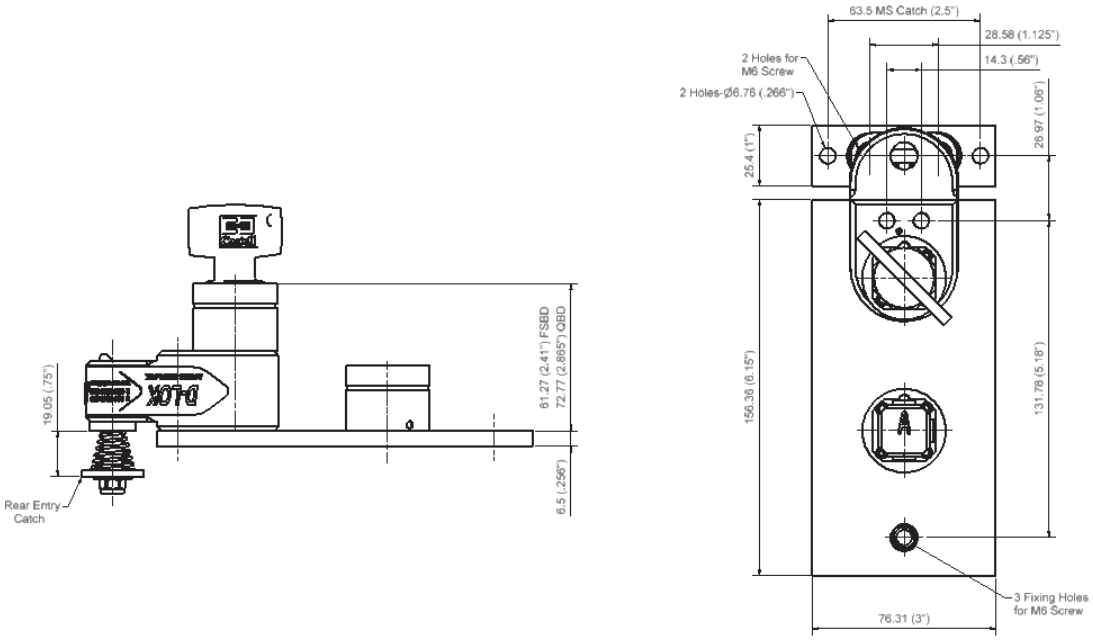


BD, back of board mount, exchange key condition, form 1

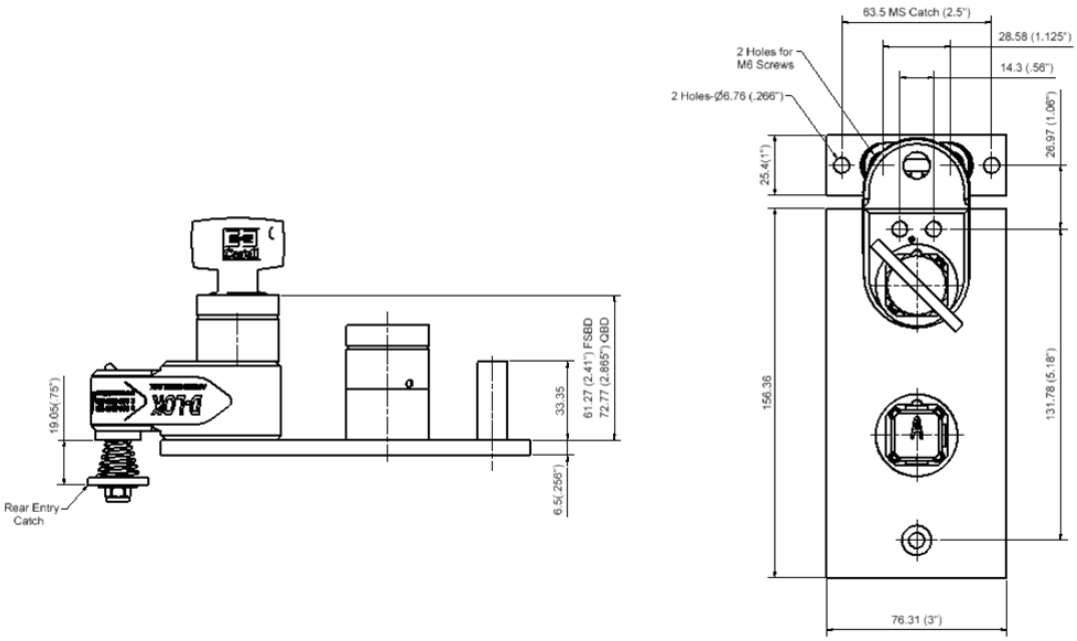


While every effort has been made to ensure the accuracy of the information provided, no liability can be taken for any errors or omission.
Castell Safety International Limited reserves the right to alter specifications and introduce improvements without prior notice.

## Order Information

| | Product Type | 1 | 2 | 3 | 4 | 5 | 6 | 7 | 8 |
|---|---|---|---|---|---|---|---|---|---|
| Part Number | BD | | | | | | | | |
| Example | BD | FS | B | F | 1S | E | RE | STD | 4 |

**9** A — **Isolation Key Symbol** (exchange key condition)
OR
**Primary Key Symbol** (double key condition)

**10** B — **Personnel Key Symbol** (exchange key condition)
OR
**Secondary Key Symbol** (double key condition)

| | | |
|---|---|---|
| 1 | **Lock portion type** | FS (1) / Q (1) |
| 2 | **Material** | B = Brass (standard) |
| 3 | **Mounting** | P = Panel mount (back of board) /<br>F = Front of board mount |
| 4 | **Secondary lock portion(s)** | 1S / 2S / 3S / 4S / 5S or 6S = 1 / 2 / 3 / 4 / 5 or 6 secondary lock portions respectively |
| 5 | **Key condition** | E = Exchange key condition /<br>D = Double key condition (simulataneous removal of all keys) |
| 6 | **Catch entry** | RE = Rear entry / FR = Front entry |
| 7 | **Catch type** | STD = standard catch, use for well aligned dors /<br>MS = catch with spring, use for misaligned doors |
| 8 | **Form** | 1 / 2 / 3 / 4 (2) |
| 9 | **Lock portion symbol:**<br>Isolation key (for exchange key condition)<br>Primary key (for double key condition, lock next to the catch) | FS (1) up to 3 characters / Q (1) up to 6 characters |
| 10 | **Lock portion symbol:**<br>Personnel key (for exchange key condition)<br>Secondary key (for double key condition) | FS (1) up to 3 characters / Q (1) up to 6 characters |

(1) **F - Lock style** Up to 3 characters **Q - Lock style** Up to 6 characters

(2) **Form** 1 2 3 4

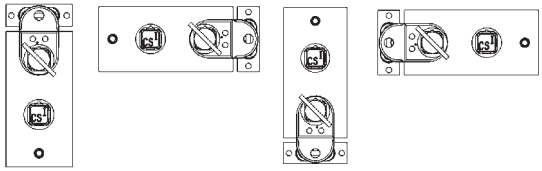

**Special construction available upon enquiry**

## Contact Information

Castell Safety International Ltd.
The Castell Building
217 Kingsbury Road
London, England NW9 9PQ

t: +44 (0) 20 8200 1200
f: +44 (0) 20 8905 9378
e: uksales@castell.com

Castell Safety International Ltd.
Oskar-Jäger-Strasse 137
50825 Köln
Germany

t: +49 (0) 221 1649 794
f: +49 (0) 221 1649 795
e: vertrieb@castell.com

Castell Interlocks Inc.
Suite 800
150 N Michigan Avenue,
Chicago, Illinois 60601
USA

t: +1.312.360.1516
f: +1.312.268.5174
e: ussales@castell.com

Castell Safety China
Building 1, No. 123,
Lane 1165, Jindu Road,
Minhang District,
Shanghai 201108, China.

t: +86 21 61519023
f: +86 21 61519030
e: chinasales@castell.com

While every effort has been made to ensure the accuracy of the information provided, no liability can be taken for any errors or omission.
Castell Safety International Limited reserves the right to alter specifications and introduce improvements without prior notice.

# BEMF

## Motion Sensing Interlock

User Manual - Original Language Version

BEMF-FSB-1D-F-CAT4-110

The BEMF Motor sensing Interlock is designed to control access to rotating machinery. The BEMF unit relies on the measurement of the electromotive force generated by the windings of an electric motor. Only when the motor has stopped will the EMF drop to zero and allow the release of a Castell key. The unit is used for connection to AC and DC motors including DC braking systems. The BEMF has been designed to provide the highest level of safety when installed as part of an access control system for dangerous machinery.

## Operation

The Castell BEMF switch disconnector is typically used for machine isolation in applications in order to protect the hazardous area from access while power is on.

### BEMF Switch Disconnesctor

1. **Power is on, key is trapped. Red LED is illuminated.**
2. **Turn the key to OFF position. At zero movement detection a signal is sent to the BEMF to energise the solenoid. A green LED is illuminated. Release the key by pushing the green button.**
3. **Key is released, power is off and the motor stands still.**

1. **While the power is on and a motor is running, the key is trapped in the BEMF motor sensing interlock. A red LED is illuminated.**
2. **Turn the key to OFF position to switch the power off. A movement detector gives a signal to the BEMF unit once zero movement has been detected. This will illuminate a green LED. The key can now be released by pushing the green button. This key can be taken to unlock the access lock on the motor unit.**
3. **The motor stands still and power is off until the key is replaced in the BEMF motor sensing unit.**

While every effort has been made to ensure the accuracy of the information provided, no liability can be taken for any errors or omission.
Castell Safety International Limited reserves the right to alter specifications and introduce improvements without prior notice.

## Usage

The BEMF motor sensing unit is designed to be part of a safety system and is used to switch off the power and detect zero motor movements before releasing a key which is then used to gain access to a hazardous area via an access interlock such as the AI or Salus.

The BEMF motor sensing unit is not designed for security purposes.

## Installation

The BEMF motor sensing unit should be mounted to a surface using suitable fasteners (please refer to drawing on page 4 for more details). The lock face should be sealed to the panel for ingress protection.

Cables should be connected to the switch in accordance with the applicable wiring diagrams. Ensure that the unit is bonded for earth continuity (please refer to drawing on page 4 for more installation details).

IMPORTANT:
The interlock should be mounted using anti-tamper fasteners to prevent unauthorised removal.

The BEMF range of motor sensing units must be installed by a competent and qualified person who has read and understood these instructions. Please retain this document in your technical file.

## Maintenance

Periodic visual checks should be carried out by the site manager / safety officer.
Do not lubricate lock barrel with oil or grease, use CK Dry Powder Graphite if necessary.

In case of defects beeing detected please contact your nearest Castell Support Department for further actions.
Please see Contact section for contact details.

While every effort has been made to ensure the accuracy of the information provided, no liability can be taken for any errors or omission.
Castell Safety International Limited reserves the right to alter specifications and introduce improvements without prior notice.

## Technical Data

| | |
|---|---|
| **Temperature** | Minimum: -5°C [23°F] |
| | Maximum: 55°C [131°F] |
| **Type of mounting** | Surface mount using suitable fasteners (please refer to drawing on page 4 for more details) |
| **Attachment** | Millimeters: 240mm(H) x 140mm(W) |
| | Inches: 9.45”(H) x 5.51”(W) |
| **Weight** | 5.0 kg |
| **Material** | Brass or Stainless steel lock portions, powder coated mild steel enclosure |
| **Standards** | EN60439-1 ,EN954 |
| **Cable Size** | M20 Gland x 2 |
| **IP Rating** | IP65, NEMA 4 enclosure |
| **Standards** | standstill detection components to UL (US, Canada) |
| **Contact Rating** | Continuous, unattended, remote |
| **Use** | Motor switch, circuit-breaker or control switch |
| **Voltage** | 24 VDC and 240 VAC, 120 VAC |
| **Max Motor Voltage** | 600V |
| **Max Power Consumption** | 20VA / 18W |

## Application

The BEMF is designed to operate as part of an integrated safety system. The BEMF controls access to hazardous areas with rotary machinery. When the electric motor is running, the key of the BEMF interlock cannot be removed, hence preventing access to the hazardous area. To gain access to the area, the electrical motor must be switched off by turning the key to OFF position. This changes the switches of the electrical supply to the machine to a safe condition. A movement sensing detector sends a signal to the BEMF unit once a zero movement of the motor has been stated. A green LED illuminates. By pushing the green button, the key can now be removed and taken by the personnell to the AI access interlock.
The guard can only be opened when the electrical supply has been switched into a safe condition.The machine cannot be restarted until the door is closed and the key is removed and taken to the BEMF motor sensing unit.

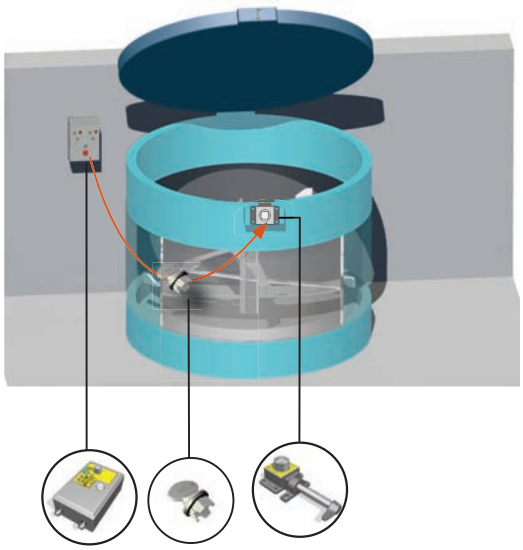

## EC-Declaration

We, the manufacturers, declare that the components, detailed herein and placed on the market, comply with all the essential health and safety requirements applying to them.

Empowered signatory:

Mr T.C. Whelan
Managing Director

While every effort has been made to ensure the accuracy of the information provided, no liability can be taken for any errors or omission.
Castell Safety International Limited reserves the right to alter specifications and introduce improvements without prior notice.

## Drawing

Dimensions:
**in mm**

***Note:*** *For safe mounting, use security screws*

BEMF

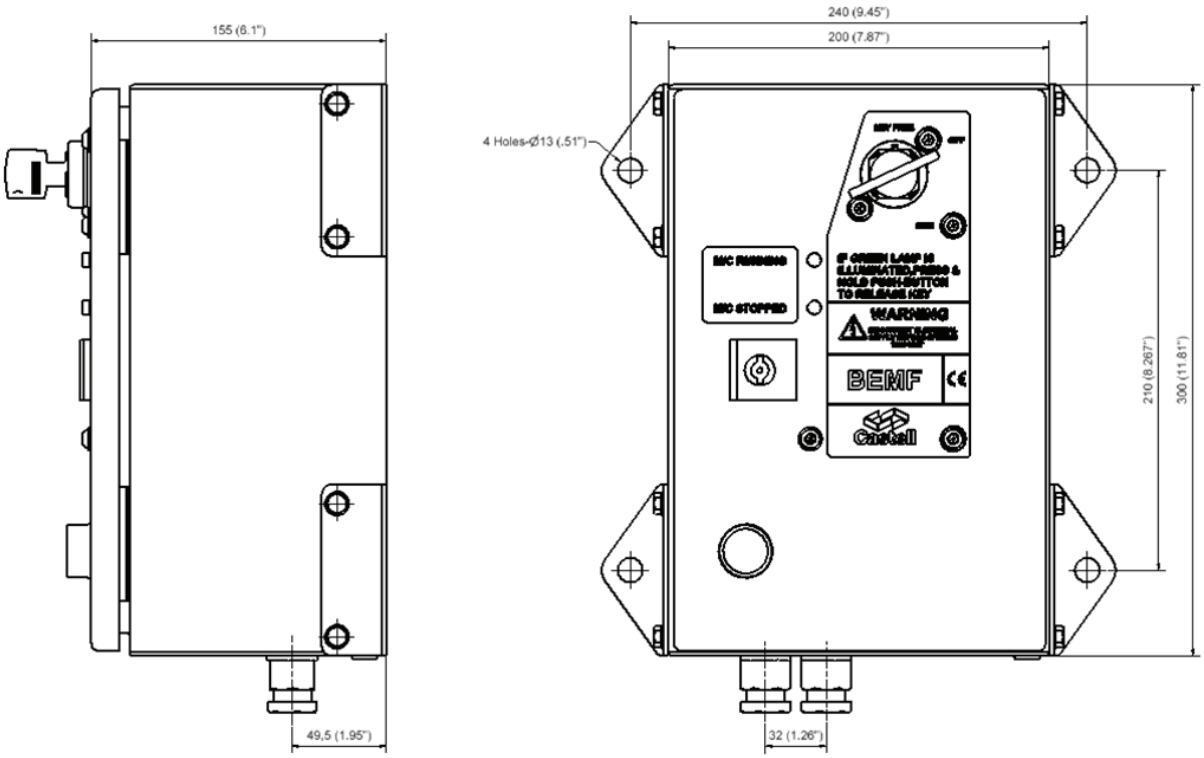


While every effort has been made to ensure the accuracy of the information provided, no liability can be taken for any errors or omission.
Castell Safety International Limited reserves the right to alter specifications and introduce improvements without prior notice.

## Wiring Diagram

### 3 Phase Motor With Star Delta Starting

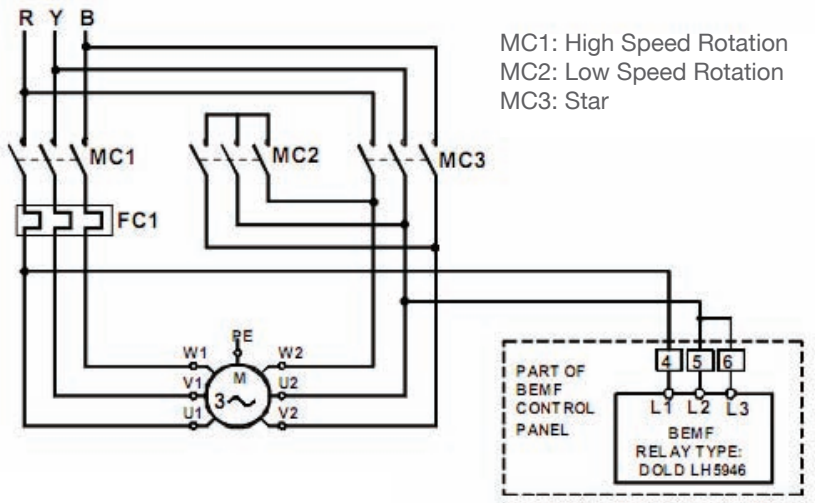


MC1: High Speed Rotation
MC2: Low Speed Rotation
MC3: Star

**Motors With Switched Winding**

Motors with star delta starting or motors with switched windings must be connected the same as a single phase motor as shown opposite in order to avoid interruption in the input circuit. Otherwise the unit will see this as a broken wire.

For motors with reversing circuit and multi speed motors please follow the same procedure. Whenever 3 phase connections are switched over, if interruption is greater then 2 sec, the BEMF unit will detect broken wire condition. In order not to store this failure the unit should be set as auto reset (i.e. link terminal X2 & X3 of BEMF relay)

### 3 Phase Motor With Variable Speed Drive

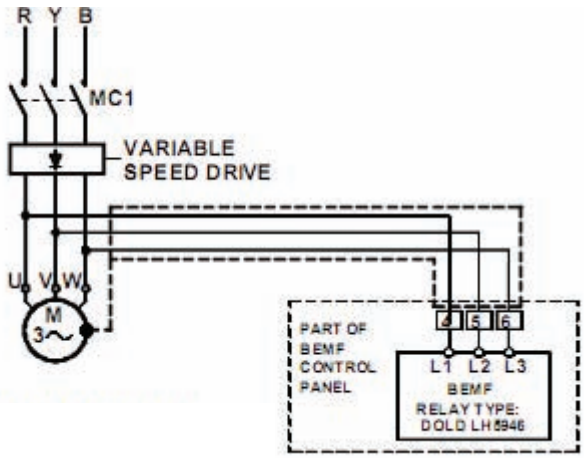


**Operation With Electronic Motor Controller**

When there are inverters in the installation, it is recommended to use screened cables to the motors. The screen can be connected to the motor housing.

While every effort has been made to ensure the accuracy of the information provided, no liability can be taken for any errors or omission.
Castell Safety International Limited reserves the right to alter specifications and introduce improvements without prior notice.

## Wiring Diagram

### 3 Phase Motor Direct on Line (DOL)

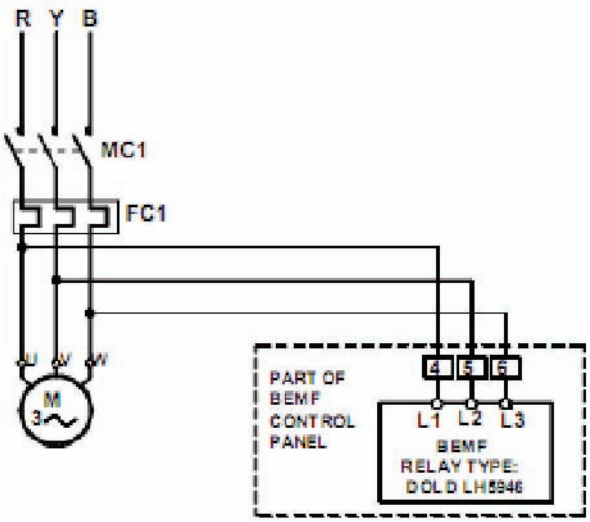


### AC Single Phase or DC Motor

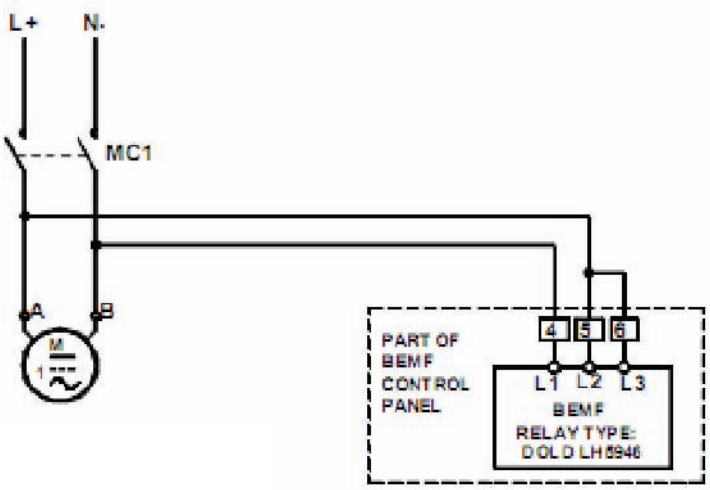


**Operation With DC Motors**

The connection is made similar to single phase motor. DC motor generate a remanence voltage during run down and unit will detect this as broken wire. In order not to store this failure the unit should be set as auto reset (i.e. link terminal X2 & X3 of BEMF relay)

While every effort has been made to ensure the accuracy of the information provided, no liability can be taken for any errors or omission.
Castell Safety International Limited reserves the right to alter specifications and introduce improvements without prior notice.

## Order Information

| | Product Type | 1 | 2 | 3 | 4 | 5 | 6 |
|---|---|---|---|---|---|---|---|
| Part Number | BEMF | | | | | | |
| Example | BEMF | FS | B | F | CAT4 | 110 | A |

| 7 |
|---|
| ABC |

| | | |
|---|---|---|
| 1 | Lock portion type | FS (1) / Q (1) |
| 2 | Material | B = Brass (standard) |
| 3 | Mounting | F = Front of board mount, with enclosure (standard) |
| 4 | Category | CAT2 or CAT4 |
| 5 | Voltage | 24 / 110 / 240 (standard) |
| 6 | Current | AC (use for 110V and 240V) / DC (use for 24V) |
| 7 | Lock portion symbol | 2 = standard contacts number |

(1) **FS - Lock type** Up to 3 characters

**Q - Lock type** Up to 6 characters

**Special construction available upon enquiry**

## Accessories

| | Product | Part number |
|---|---|---|
| | Flip Cap | FLIP-S |

## Contact Information

Castell Safety International Ltd.
The Castell Building
217 Kingsbury Road
London, England NW9 9PQ

t: +44 (0) 20 8200 1200
f: +44 (0) 20 8905 9378
e: uksales@castell.com

Castell Safety International Ltd.
Oskar-Jäger-Strasse 137
50825 Köln
Germany

t: +49 (0) 221 1649 794
f: +49 (0) 221 1649 795
e: vertrieb@castell.com

Castell Interlocks Inc.
Suite 800
150 N Michigan Avenue,
Chicago, Illinois 60601
USA

t: +1.312.360.1516
f: +1.312.268.5174
e: ussales@castell.com

Castell Safety China
Building 1, No. 123,
Lane 1165, Jindu Road,
Minhang District,
Shanghai 201108, China.

t: +86 21 61519023
f: +86 21 61519030
e: chinasales@castell.com

While every effort has been made to ensure the accuracy of the information provided, no liability can be taken for any errors or omission.
Castell Safety International Limited reserves the right to alter specifications and introduce improvements without prior notice.

# D

# Panel Door Interlock

User Manual - Original Language Version

D-FSS-RE-STD-2 (Form 2)

The D type lock is a two-part interlock, comprising of a lock body and rear or front entry mounted catch. Typically, the D lock is used for interlocking electrical control cubicles and distribution panels. It is also suitable for use on light access doors or hatches. The catch is available in two options, one suited to well aligned doors, the other suited to poor, misaligned doors. The D lock is available as F style (figure style) or Q style of lock portions.The lock is manufactured in brass or stainless steel making it ideal for use in harsh or corrosive environments.

## Operation

The D lock range is used for interlocking electrical control cubicles and distribution panels.

### D Panel Door Interlock, Form 2

① **Key is free, catch is trapped**

② **Insert and turn key to release catch**

③ **Key is trapped, catch is free**

1. **While the catch is trapped, the key is free. The mechanism is locked keeping the door locked closed.**
2. **By inserting and turning the key in the D lock, you can release the catch. This will trap the key into the lock.**
3. **The key stays trapped while the catch is released and door opened.**

The D panel door interlock is available with as rear or front entry mounted catch.
The catch is available as standard catch for well aligned doors or as MS catch for misaligned doors.

While every effort has been made to ensure the accuracy of the information provided, no liability can be taken for any errors or omission.
Castell Safety International Limited reserves the right to alter specifications and introduce improvements without prior notice.

## Usage

The D Panel Door Interlock should be used for interlocking electrical control cubicles and distribution panels.

The D Lock is not designed for security purposes, such as a safe or external access to a building.

No hazardous substances were used in the manufacture of this product. The product can be disposed of in standard waste.

## Installation

The housing of the D Panel Door Interlock should normally be mounted to a panel using suitable fasteners (please refer to drawing on page 4 for more details)

IMPORTANT:
The interlock should be mounted using anti-tamper fasteners to prevent unauthorised removal.

The D Panel Door Interlock must be installed by a competent and qualified person who has read and understood these instructions. Please retain this document in your technical file.

## Maintenance

Periodic visual checks should be carried out by the site manager / safety officer.
Do not lubricate lock barrel with oil or grease, use CK Dry Powder Graphite if necessary.

In case of defects beeing detected please contact your nearest Castell Support Department for further actions.
Please see Contact section for contact details.

While every effort has been made to ensure the accuracy of the information provided, no liability can be taken for any errors or omission.
Castell Safety International Limited reserves the right to alter specifications and introduce improvements without prior notice.

## Technical Data

| | |
|---|---|
| **Temperature rating** | Minimum: -40°C [-40°F] ice free for Q & F Type |
| | Maximum: 107°C [224,6°F] for Q Type/140°C [284°F] for F Type |
| **Type of mounting** | surface mount using suitable fasteners (please refer to drawing on page 4 for more details) |
| **Weight** | 1 kg |
| **Material** | Brass/Stainless steel |
| **MTTF Certification** | Available on request |

## Application

The power supply to the system is switched on and the access doors to the hazardous area are locked closed.

The removal of the isolation key in the KSS20, isolates the electrical supply to the LV Panel. This key is then used to unlock the D panel door interlock interlock on the panel door.

The power cannot be switched on until the door is closed, the catch is trapped in the D panel door interlock and the key returned to the KSS20.

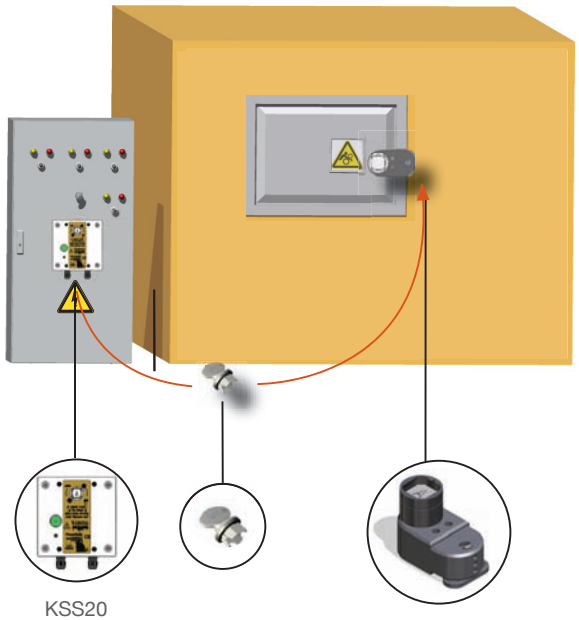

KSS20

D Panel Door Interlock

## EC-Declaration

We, the manufacturers, declare that the components, detailed herein and placed on the market, comply with all the essential health and safety requirements applying to them.

Empowered signatory:

Mr T.C. Whelan
Managing Director

While every effort has been made to ensure the accuracy of the information provided, no liability can be taken for any errors or omission.
Castell Safety International Limited reserves the right to alter specifications and introduce improvements without prior notice.

## Drawing

Dimensions:
**in mm**

***Note:*** *For safe mounting, use security screws*

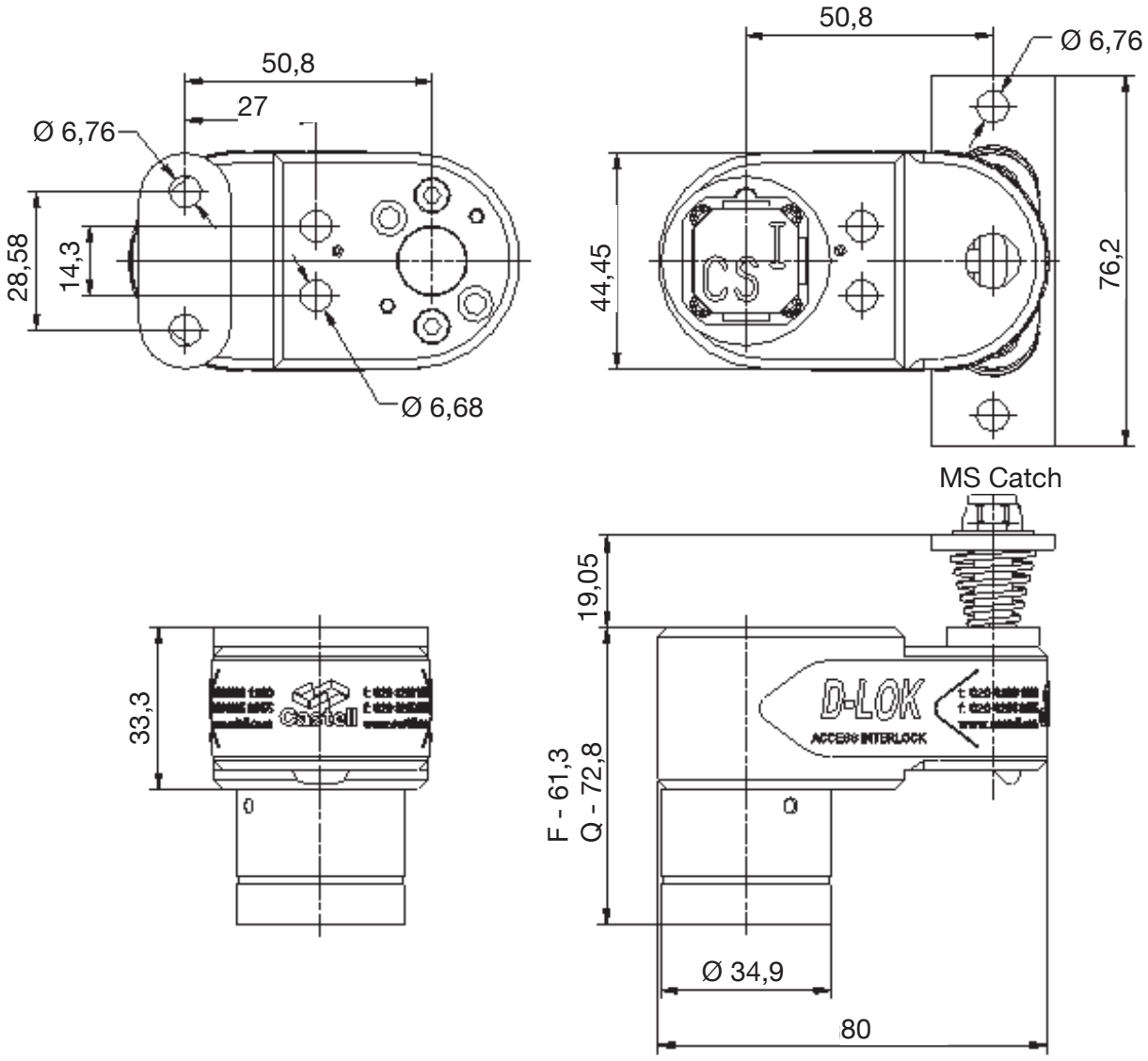


While every effort has been made to ensure the accuracy of the information provided, no liability can be taken for any errors or omission.
Castell Safety International Limited reserves the right to alter specifications and introduce improvements without prior notice.

## Order Information

| | Product Type | 1 | 2 | 3 | 4 | 5 | 6 |
|---|---|---|---|---|---|---|---|
| Part Number | D | | | | | | ABC |
| Example | D | FS | B | RE | STD | 1 | |

| | | |
|---|---|---|
| 1 | **Lock portion type** | FS (1) / Q (1) |
| 2 | **Material** | B = Brass / S = Stainless steel |
| 3 | **Catch entry** | RE = Rear entry / FR = Front entry |
| 4 | **Catch type** | STD = standard catch, use for well aligned dors / MS = catch with spring, use for misaligned doors |
| 5 | **Form** | 1 / 2 / 3 / 4 (2) |
| 6 | **Lock portion symbol** | FS (1) up to 3 characters / Q (1) up to 6 characters |

(1) **F - Lock style** Up to 3 characters **Q - Lock style** Up to 6 characters

(2) **Form** 1 2 3 4

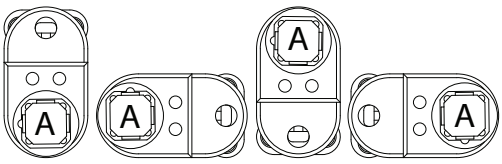


**Special construction available upon enquiry**

## Accessories

| | Product | Part number |
|---|---|---|
| | Flip Cap | FLIP-S |

## Contact Information

Castell Safety International Ltd.
The Castell Building
217 Kingsbury Road
London, England NW9 9PQ

t: +44 (0) 20 8200 1200
f: +44 (0) 20 8905 9378
e: uksales@castell.com

Castell Safety International Ltd.
Oskar-Jäger-Strasse 137
50825 Köln
Germany

t: +49 (0) 221 1649 794
f: +49 (0) 221 1649 795
e: vertrieb@castell.com

Castell Interlocks Inc.
Suite 800
150 N Michigan Avenue,
Chicago, Illinois 60601
USA

t: +1.312.360.1516
f: +1.312.268.5174
e: ussales@castell.com

Castell Safety China
Building 1, No. 123,
Lane 1165, Jindu Road,
Minhang District,
Shanghai 201108, China.

t: +86 21 61519023
f: +86 21 61519030
e: chinasales@castell.com

While every effort has been made to ensure the accuracy of the information provided, no liability can be taken for any errors or omission.
Castell Safety International Limited reserves the right to alter specifications and introduce improvements without prior notice.

# DAE

## Mechanical Time Delay Unit

User Manual - Original Language Version

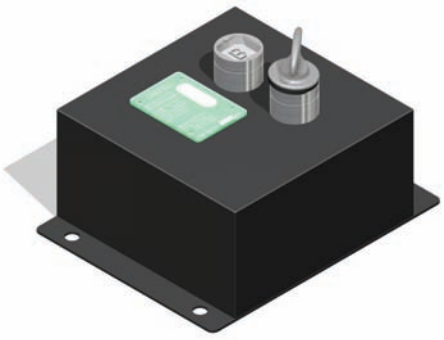

DAE-FSB-30

The DAE is a dual key controlled mechanical time delay unit designed to control access to dangerous machines which have a run-down time or where machinery must complete an operating cycle before access is permitted. The DAE is made for applications where the availability of the main power is limited or where the timer needs to be located in a potentially explosive atmosphere.

## Operation

The Castell Mechanical Time Delay Units are used in various applications to control access to hazardous areas, where a run-down time of a machinery is required.

### DAE Mechanical Time Delay, 30 sec

1. **Key B is trapped in the DAE, key A is held in a key switch while power is on**

2. **Insert and turn key A to initiate time run-down. Once completed, release key B**

3. **While key B is released, key A is trapped**

1. **When the machine is running, key A is trapped in the key switch controlling the power. Key B is trapped in the mechanical time delay unit. This key is used to access the machine area, once machine has stopped running.**
2. **Key A is released from the key switch and the power supply is switched off. Key A is then inserted and turned in the DAE unit. Once turned, the time delay begins. Key B is held in the DAE until time elapses. Once the time delay has elapsed the indicator bar on the DAE rotates from red to white. Key B can now be turned and removed.**
3. **This traps key A in the DAE, key A cannot be released until key B is returned.**

The DAE mechanical time delay unit is available with 30, 60 or 90 seconds time delay as standard versions.

Any time delay within a range betweeen 30 seconds and 55 minutes is available on request.

The time delay must be longer than the machine run-down time.

While every effort has been made to ensure the accuracy of the information provided, no liability can be taken for any errors or omission.
Castell Safety International Limited reserves the right to alter specifications and introduce improvements without prior notice.

## Usage

The DAE is designed to operate as part of an integrated safety system, controlling access to hazardous areas. A typical example of machine isolation, time delay and access control.

The DAE mechanical time delay unit is not designed for security purposes.

No hazardous substances were used in the manufacture of this product. The product can be disposed of in standard waste.

## Installation

The housing of the DAE mechnaical time delay unit should normally be mounted to a panel using suitable fasteners. Please refer to drawing on page 4 for more installation details.

IMPORTANT:
The unit should be mounted using anti-tamper fasteners to prevent unauthorised removal.

The DAE mechanical time delay unit must be installed by a competent and qualified person who has read and understood these instructions. Please retain this document in your technical file.

## Maintenance

Periodic visual checks should be carried out by the site manager / safety officer.
Do not lubricate lock barrel with oil or grease, use CK Dry Powder Graphite if necessary.

In case of defects beeing detected please contact your nearest Castell Support Department for further actions.
Please see Contact section for contact details.

While every effort has been made to ensure the accuracy of the information provided, no liability can be taken for any errors or omission.
Castell Safety International Limited reserves the right to alter specifications and introduce improvements without prior notice.

## Technical Data

| | |
|---|---|
| **Temperature rating** | Minimum: -40°C [-40°F] ice free for Q & FS Type |
| | Maximum: 107°C [224.6°F] Q Type / 140°C [284°F] FS Type |
| **Type of mounting** | Surface mount using suitable fasteners (please refer to drawing on page 4 for more details) |
| **Weight** | 3,0 kg |
| **Material** | Mild steel |
| **MTTF Certification** | Available on request |

## Application

In a typical application, the DAE mechanical time delay unit is designed to operate as a part of an integrated safety system that controls access to hazardous areas.

The release of the isolation key (key A) from a key switch, e. g. KS20, unterrupts the electrical supply to the machine.

Key A is then placed in the DAE time delay unit and turned, initiating the timer. After completion of the time out period key B can be released (the time delay must be longer than the machine run-down time).

Key B can then be taken to the AIE acess interlock and the door to the machine room can be opened.

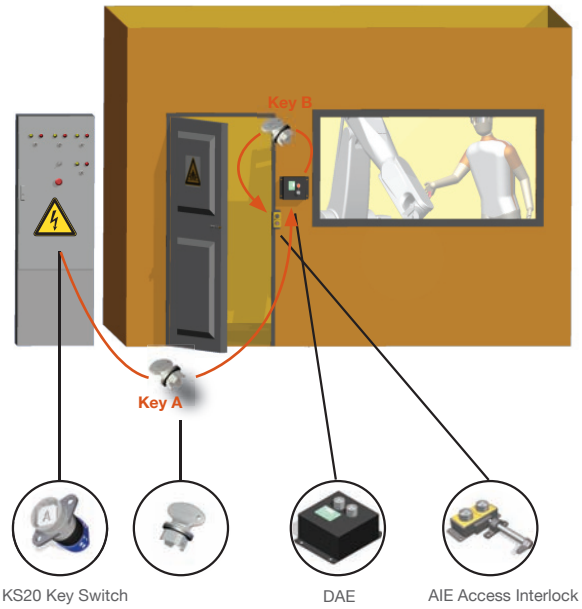


## EC-Declaration

We, the manufacturers, declare that the components, detailed herein and placed on the market, comply with all the essential health and safety requirements applying to them.

Empowered signatory:

Mr T.C. Whelan
Managing Director

While every effort has been made to ensure the accuracy of the information provided, no liability can be taken for any errors or omission.
Castell Safety International Limited reserves the right to alter specifications and introduce improvements without prior notice.

## Drawing

Dimensions:
**in mm**

***Note:*** *For safe mounting, use security screws*

DAE

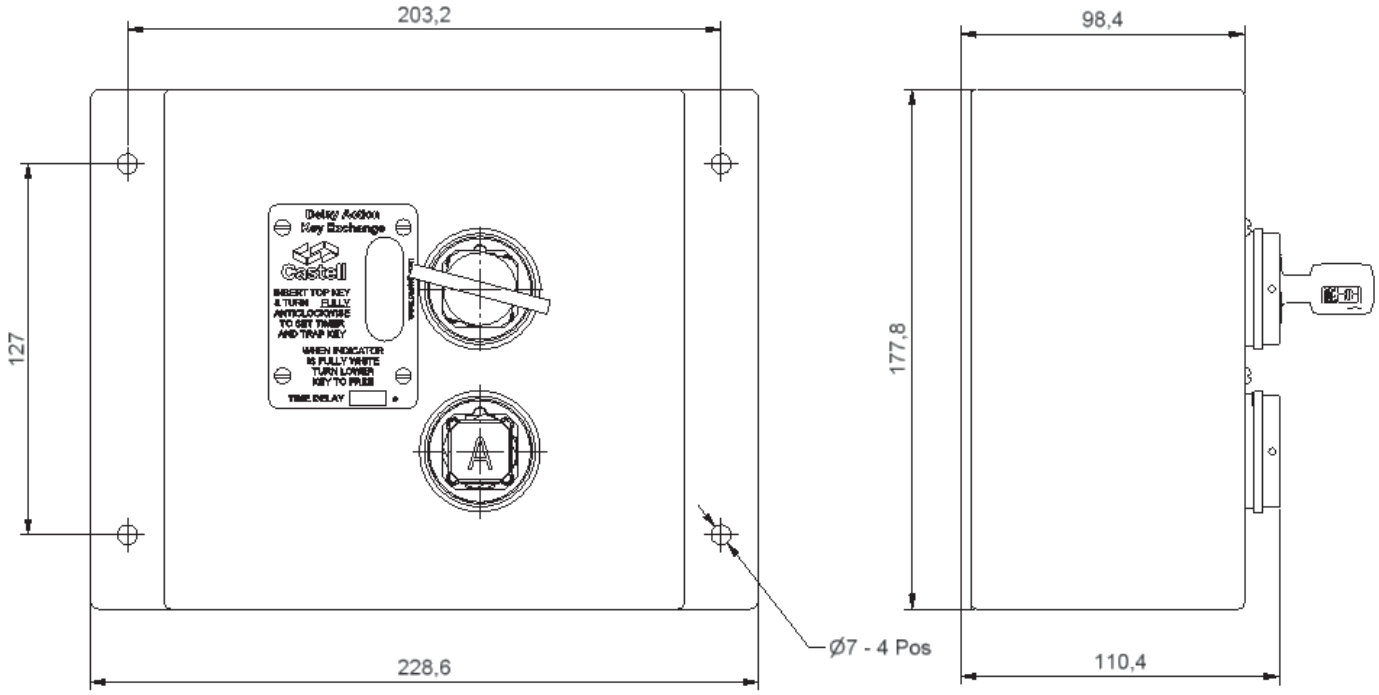


While every effort has been made to ensure the accuracy of the information provided, no liability can be taken for any errors or omission.
Castell Safety International Limited reserves the right to alter specifications and introduce improvements without prior notice.

## Order Information

| | Product Type | | 1 | 2 | | 3 |
|---|---|---|---|---|---|---|
| Part Number | DAE | - | | | - | |
| Example | DAE | - | FS | B | - | 30 |

| 4 |
|---|
| ABC |

| | | |
|---|---|---|
| 1 | **Lock portion type** | FS (1) / Q (1) |
| 2 | **Material** | B = Brass |
| 3 | **Time delay** | 30, 60 or 90 sec (as standard) or as required (max. 30min)* |
| 5 | **Lock portion symbol** | FS (1) up to 3 digits / Q (1) up to 6 digits |

(1) **FS - Lock type**
Up to 3 symbols

**Q - Lock type**
Up to 6 symbols

* The time delay of the DAE unit must be longer than the machine run-down time

## Accessories

**Special construction available upon enquiry**

| | Product | Part number |
|---|---|---|
| | Flip Cap | FLIP-S |

## Contact Information

Castell Safety International Ltd.
The Castell Building
217 Kingsbury Road
London, England NW9 9PQ

t: +44 (0) 20 8200 1200
f: +44 (0) 20 8905 9378
e: uksales@castell.com

Castell Safety International Ltd.
Oskar-Jäger-Strasse 137
50825 Köln
Germany

t: +49 (0) 221 1649 794
f: +49 (0) 221 1649 795
e: vertrieb@castell.com

Castell Interlocks Inc.
Suite 800
150 N Michigan Avenue,
Chicago, Illinois 60601
USA

t: +1.312.360.1516
f: +1.312.268.5174
e: ussales@castell.com

Castell Safety China
Building 1, No. 123,
Lane 1165, Jindu Road,
Minhang District,
Shanghai 201108, China.

t: +86 21 61519023
f: +86 21 61519030
e: chinasales@castell.com

While every effort has been made to ensure the accuracy of the information provided, no liability can be taken for any errors or omission.
Castell Safety International Limited reserves the right to alter specifications and introduce improvements without prior notice.

# EDIX

## Dual Key Access Interlock

User Manual - Original Language Version

EDIX-FSS-BRI-2

The EDIX is a dual key access interlock complete with emergency exit system for use on hinged doors. The interlock is manufactured in durable stainless steel and comes with the stainless steel FS or Q style lock portions. Two internal crashbar options are available: a light duty two point aluminum and a heavy duty three point stainless steel. The EDIX interlock is ideal for use in harsh or corrosive environments where it is subject to heavy use. Typical industries using the EDIX are fire protection, turbine and offshore industry.

## Operation

Castell dual key access interlocks are used in various applications to control full body access to hazardous areas.

### EDIX dual key access interlock, Hand 1

1. **Door is locked closed while isolation key is free and personnel key is trapped.**
2. **Insert and turn isolation key, then release personnel key and release catch from locking mechanism by operating the handle.**
3. **Door is unlocked, isolation key is trapped and personnel key is free.**

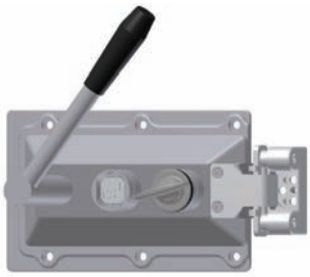

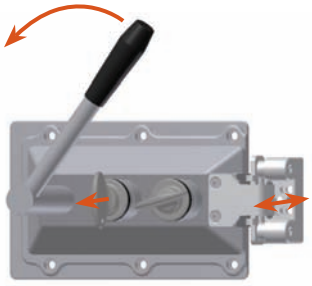

1. **While the isolation key is free, the catch of the EDIX is trapped in the locking mechanism of the dual key access interlock. The door is locked and the personnel key is trapped.**
2. **By inserting and turning the isolation key in the interlock, you can release the personnel key and then release the catch by operating the handle. This will trap the isolation key in the lock. The released key should be taken by the personnel to the hazardous area.**
3. **The isolation key stays trapped until the personnel key is returned to the EDIX unit and the catch is trapped in the mechanism.**

While every effort has been made to ensure the accuracy of the information provided, no liability can be taken for any errors or omission.
Castell Safety International Limited reserves the right to alter specifications and introduce improvements without prior notice.

## Usage

The EDIX dual key access interlock should be used to allow safe access to potential hazardous and dangerous areas.
The EDIX dual key access interlock should be used on full body access doors where the use of personal safety keys is essential, to prevent accidental lock in.

The EDIX dual key access interlock is not designed for security purposes, such as a safe or external access to a building.

No hazardous substances were used in the manufacture of this product. The product can be disposed of in standard waste.

## Installation

The housing of the EDIX dual key access interlock should normally be mounted on the static frame of the guard and the catch mechanism to the sliding or hinged door using suitable fasteners. Fixed bolt bracket is highly tolerant to misaligned guards and should be fitted with suitable fasteners. Please refer to the drawing on page 4 for maximum and minimum mounting distance for the housing, catch mechanism and mounting holes details. The EDIX interlocks are avalable in Hand 1 and Hand 2 version suitable for left or right hinged doors, respectively. Anti vibration pads should be used on machines that generate a high level of vibration.

IMPORTANT:
The EDIX dual key access interlock should be mounted on the guard using anti-tamper fasteners to prevent unauthorised removal.

The EDIX dual key access interlock must be installed by a competent and qualified person who has read and understood these instructions. Please retain this document in your technical file.

## Maintenance

Periodic visual checks should be carried out by the site manager/safety officer.
Do not lubricate lock barrel with oil or grease, use CK Dry Powder Graphite if necessary.

In case of defects beeing detected please contact your nearest Castell Support Department for further actions.
Please see Contact section for contact details.

While every effort has been made to ensure the accuracy of the information provided, no liability can be taken for any errors or omission.
Castell Safety International Limited reserves the right to alter specifications and introduce improvements without prior notice.

## Technical Data

| | |
|---|---|
| **Temperature rating** | Minimum: -40°C [-40°F] ice free for Q & FS type |
| | Maximum: 107°C [224,6°F] for Q type/140°C [284°F] for FS type or 288°C [550°F] upon request |
| **Type of mounting** | Surface mount using suitable fasteners (see drawing on page 4 for mounting details) |
| **Weight** | Stainless steel: 14,0 kg |
| **Material** | Stainless steel |
| **MTTF Certification** | Available on request |

## Application

The EDIX is used as a part of a safety system to guard personnel when working within an area protected by a CO2 extinguishing system.

The safety system involves a KS key switch for the electrical supply to the extinguishing system controlling its operation mode. The removal of the key from the key switch changes the mode of the extinguishing system from automatic to manual. This key is then inserted in the MBV modular ball valve interlock fitted to the CO2 valve. With the key inserted, the valve is turned to the closed position, preventing the extinguishing system from being activated and allowing the removal of the secondary key from the MBV. This key is then inserted into the isolation lock on the EDIX and the personnel key removed. The door can now be opened by operating the handle. The personnel key is taken into the area by the operative. This prevents the ability of others to re-energize the extinguishing system while maintenance is being performed.

In case of an emergency the EDIX door lock can be overridden from the inside using the emergency exit crash bar.

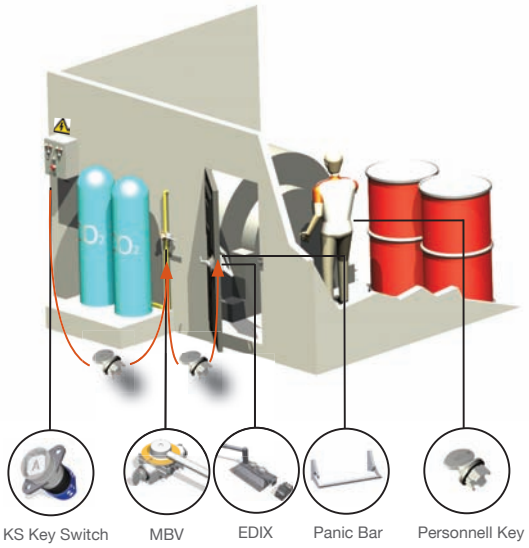


## EC-Declaration

We, the manufacturers, declare that the components, detailed herein and placed on the market, comply with all the essential health and safety requirements applying to them.

Empowered signatory:

Mr T.C. Whelan
Managing Director

While every effort has been made to ensure the accuracy of the information provided, no liability can be taken for any errors or omission.
Castell Safety International Limited reserves the right to alter specifications and introduce improvements without prior notice.

## Drawing

Dimensions:
**in mm**

***Note:*** *For safe mounting, use security screws*

EDIX, Hand 1

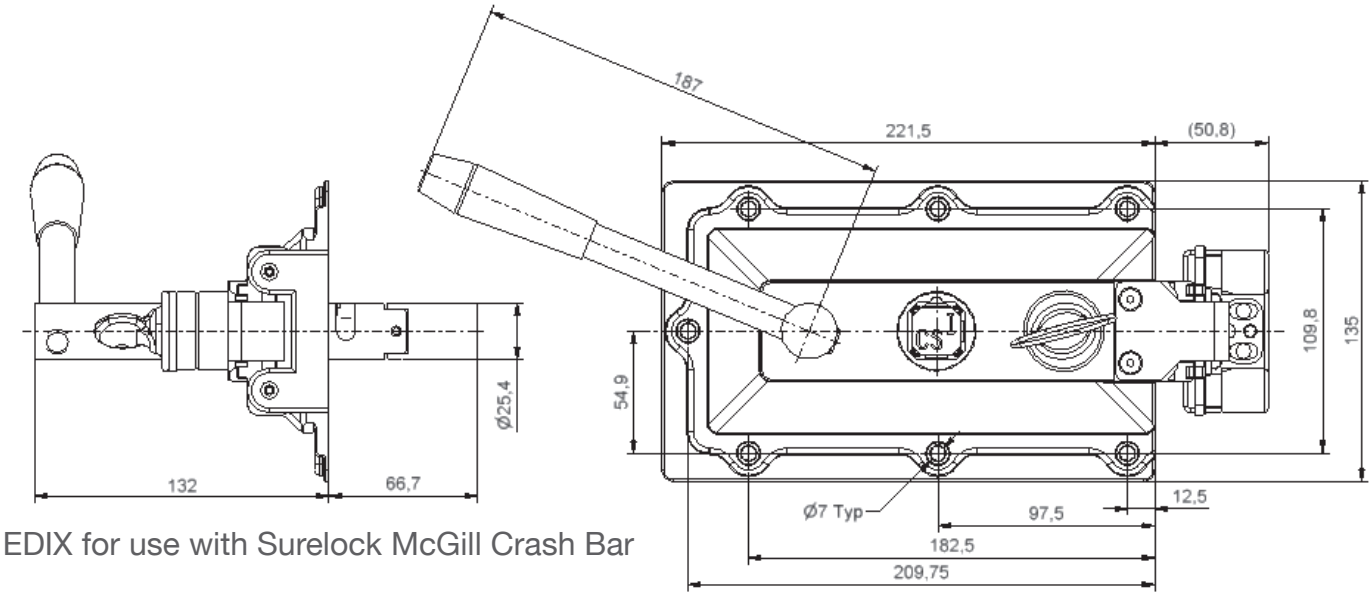


EDIX for use with Surelock McGill Crash Bar

EDIX, Hand 2

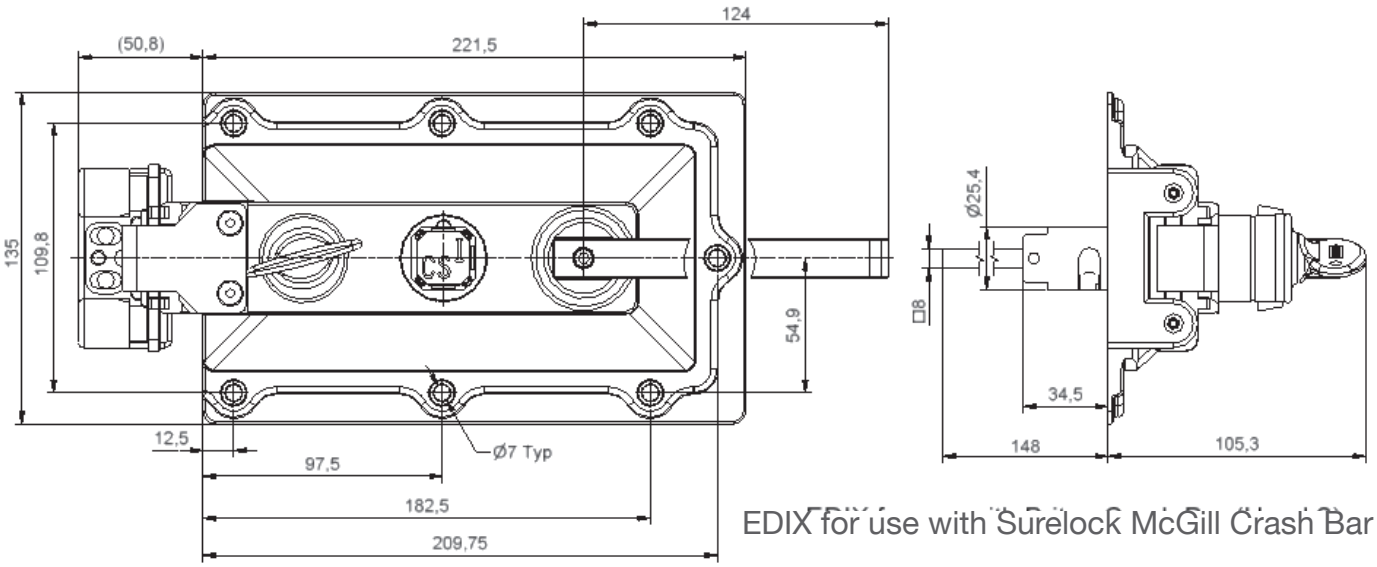


EDIX for use with Surelock McGill Crash Bar

While every effort has been made to ensure the accuracy of the information provided, no liability can be taken for any errors or omission.
Castell Safety International Limited reserves the right to alter specifications and introduce improvements without prior notice.

## Order Information

| | Product Type | 1 | 2 | 3 | 4 | 5* |
|---|---|---|---|---|---|---|
| Part Number | EDIX | | | | | |
| Example | EDIX | FS | S | SUR | 1 | LC |

**6**
- A1 — **Isolation Key Symbol** (exchange key condition)
- OR
- **Primary Key Symbol** (double key condition)

**7**
- B1 — **Personnel Key Symbol** (exchange key condition)
- OR
- **Secondary Key Symbol** (double key condition)

| | | |
|---|---|---|
| **1** | **Lock portion type** | FS (1) / Q (1) |
| **2** | **Material** | S = Stainless steel (standard) |
| **3** | **Crash bar type** | SUR = SURELOCK McGill crash bar<br>BRI = BRITON crashbar |
| **4** | **Handing** | 1 = left hinged door (2)<br>2 = right hinged door (2) |
| **5*** | **Optional:** | LC = less crash bar<br>MS = M/S crash bar |
| **5** | **Lock portion symbol:**<br>Isolation key symbol (for exchange key condition)<br>Primary key symbol (for double key condition) | FS (1) up to 3 characters / Q (1) up to 6 characters |
| **6** | **Lock portion symbol:**<br>Personnel key symbol (for exchange key condition)<br>Secondary key symbol (for double key condition) | FS (1) up to 3 characters / Q (1) up to 6 characters |

(1) **FS - Lock type** Up to 3 characters **Q - Lock type** Up to 6 characters

(2) **Handing** **1** **2**

**Special construction available upon enquiry**

## Contact Information

Castell Safety International Ltd.
The Castell Building
217 Kingsbury Road
London, England NW9 9PQ

t: +44 (0) 20 8200 1200
f: +44 (0) 20 8905 9378
e: uksales@castell.com

Castell Safety International Ltd.
Oskar-Jäger-Strasse 137
50825 Köln
Germany

t: +49 (0) 221 1649 794
f: +49 (0) 221 1649 795
e: vertrieb@castell.com

Castell Interlocks Inc.
Suite 800
150 N Michigan Avenue,
Chicago, Illinois 60601
USA

t: +1.312.360.1516
f: +1.312.268.5174
e: ussales@castell.com

Castell Safety China
Building 1, No. 123,
Lane 1165, Jindu Road,
Minhang District,
Shanghai 201108, China.

t: +86 21 61519023
f: +86 21 61519030
e: chinasales@castell.com

While every effort has been made to ensure the accuracy of the information provided, no liability can be taken for any errors or omission.
Castell Safety International Limited reserves the right to alter specifications and introduce improvements without prior notice.

# FLIP CAP

## Protective Cap

User Manual - Original Language Version

FLIP-S

The Castell protective cap is used to prevent dust ingress into the Castell F (Figure) style lock portion. In addition, the cap can be fitted with a padlock to prevent lock operation during maintenance.

## Usage

The Castell FLIP-S is padlockable protective cap is used to prevent dust ingress getting into the Castell F (Figure) style lock portion.

## Technical Data

| | |
|---|---|
| **Temperature rating** | Minimum: -40°C [-40°F] ice free for Q & F Type |
| | Maximum: 107°C [224,6°F] for Q Type/140°C [284°F] for F Type |
| **Weight** | 0,1 kg |
| **Material** | Stainless steel/brass /nickel plated/chome plated/nylon coated |

No hazardous substances were used in the manufacture of this product. The product can be disposed of in standard waste.

## EC-Declaration

We, the manufacturers, declare that the components, detailed herein and placed on the market, comply with all the essential health and safety requirements applying to them.

Empowered signatory:

Mr T.C. Whelan
Managing Director

While every effort has been made to ensure the accuracy of the information provided, no liability can be taken for any errors or omission.
Castell Safety International Limited reserves the right to alter specifications and introduce improvements without prior notice.

## Drawing

**FLIP-S**

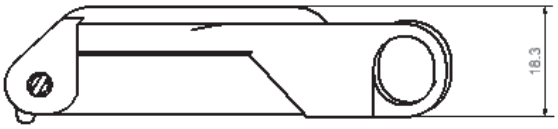


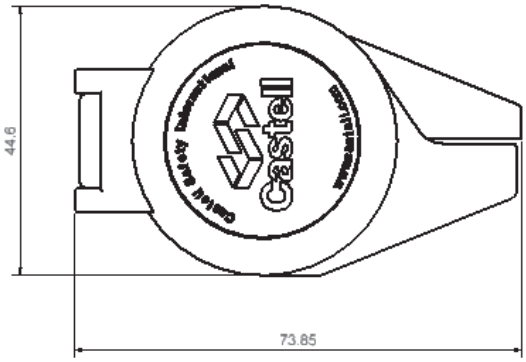


## Order Information

**Part Number** FLIP - S

## Contact Information

Castell Safety International Ltd.
The Castell Building
217 Kingsbury Road
London, England NW9 9PQ

t: +44 (0) 20 8200 1200
f: +44 (0) 20 8905 9378
e: uksales@castell.com

Castell Safety International Ltd.
Oskar-Jäger-Strasse 137
50825 Köln
Germany

t: +49 (0) 221 1649 794
f: +49 (0) 221 1649 795
e: vertrieb@castell.com

Castell Interlocks Inc.
Suite 800
150 N Michigan Avenue,
Chicago, Illinois 60601
USA

t: +1.312.360.1516
f: +1.312.268.5174
e: ussales@castell.com

Castell Safety China
Building 1, No. 123,
Lane 1165, Jindu Road,
Minhang District,
Shanghai 201108, China.

t: +86 21 61519023
f: +86 21 61519030
e: chinasales@castell.com

While every effort has been made to ensure the accuracy of the information provided, no liability can be taken for any errors or omission.
Castell Safety International Limited reserves the right to alter specifications and introduce improvements without prior notice.

# FS/Q

## Switchgear Interlock
User Manual - Original Language Version

F1S-ACW-65-9.5-22

The FS and Q Interlocks are designed for use as a mechanical interlock for electrical switchgear. This is done through a mechanical connection to the isolation equipment. The standard unit is fitted with a 9.5mm square x 22mm spigot that can be used to operate an isolator. Inserting and turning the key moves the spigot through a predetermined angular position (45°/65°/90° clock or anti clock wise) moving the isolator to closed. Rotating the key in the opposite direction will open the isolator and will release the key. The free key can then be transferred to operate a parallel supply stream or an access interlock. The FS and Q locks are manufactured in brass or stainless steel making it ideal for harsh or corrosive environments.

## Operation

The FS/Q switchgear interlocks are designed to control the operation of HV/LV switchgear.

### FS/Q switchgear interlock

1. **Key is trapped, HV/LV circuit is closed.**

2. **Turn and release key to open the HV/LV circuit.**

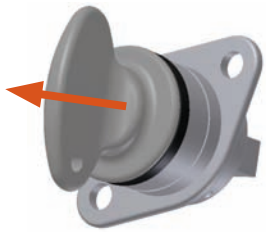

3. **Key is free and the HV/LV circuit is open.**

1. **While the key is trapped, the isolator is closed providing the power supply.**
2. **Turning the key opens the isolator. The key can then be released.**
3. **The free key can be used to operate either a parallel supply stream or an access interlock.**

The FS/Q switchgear interlocks are available in a 45° clockwise or in a 45° anti clockwise mounting position.
A set range of rotational movement and spigot lengths are available (see page 5 for ordering details).

While every effort has been made to ensure the accuracy of the information provided, no liability can be taken for any errors or omission.
Castell Safety International Limited reserves the right to alter specifications and introduce improvements without prior notice.

## Usage

The FS/Q switchgear interlocks should be used as part of an integrated safety system, to control the operation of HV/LV switchgears.

The FS/Q switchgear interlocks are not designed for security purposes, such as a safe or external access to a building.

No hazardous substances were used in the manufacture of this product. The product can be disposed of in standard waste.

## Installation

The FS/Q switchgear interlocks should normally be mounted to a panel using suitable fasteners. Please refer to drawing on page 4 for more details

IMPORTANT:
The interlock should be mounted using anti-tamper fasteners to prevent unauthorised removal.

The FS/Q switchgear interlocks must be installed by a competent and qualified person who has read and understood these instructions. Please retain this document in your technical file.

## Maintenance

Periodic visual checks should be carried out by the site manager / safety officer.
Do not lubricate lock barrel with oil or grease, use CK Dry Powder Graphite if necessary.

In case of defects beeing detected please contact your nearest Castell Support Department for further actions.
Please see Contact section for contact details.

While every effort has been made to ensure the accuracy of the information provided, no liability can be taken for any errors or omission.
Castell Safety International Limited reserves the right to alter specifications and introduce improvements without prior notice.

## Technical Data

| | |
|---|---|
| **Temperature rating** | Minimum: -40°C [-40°F] ice free for Q & F Type |
| | Maximum: 107°C [224,6°F] for Q Type/140°C [284°F] for F Type |
| **Type of mounting** | panel mount using suitable fasteners (please refer to drawing on page 4 for more details) |
| **Weight** | 0,2 kg |
| **Material** | Brass/Stainless steel/Nickel Plated |
| **MTTF Certification** | Available on request |

## Application

The FS/Q locks are used to ensure that multiple supplies are not applied to common bus bars.

When all incomers are closed the bus bars are open. To close a bus bar, first the incomers must be switched to open.

In the shown is application to close Bus 1, either incomer AA or AB must be opened. The key is removed from either AA or AB connection and is then inserted into the bus switch A_ (A BLANK).

To close Bus 2, either incomer AB or BB must be opened and the key AB or BB transfered to the switch _B (BLANK B).

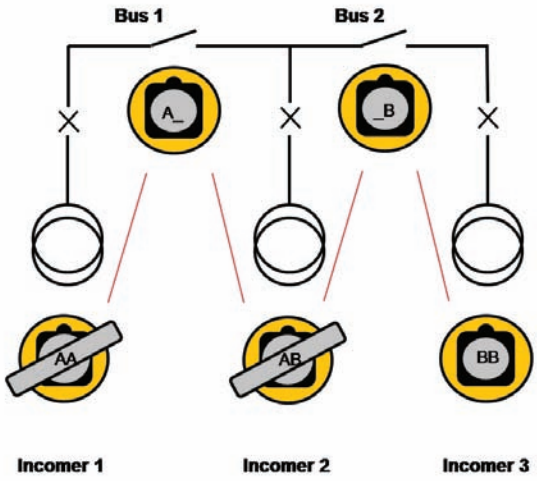


## EC-Declaration

KSS20

D Panel Door Interlock

We, the manufacturers, declare that the components, detailed herein and placed on the market, comply with all the essential health and safety requirements applying to them.

Empowered signatory:

Mr T.C. Whelan
Managing Director

While every effort has been made to ensure the accuracy of the information provided, no liability can be taken for any errors or omission.
Castell Safety International Limited reserves the right to alter specifications and introduce improvements without prior notice.

## Drawing

Dimensions:
**in mm**

***Note:*** *For safe mounting, use security screws*

FS1 lock (45° clockwise mount)

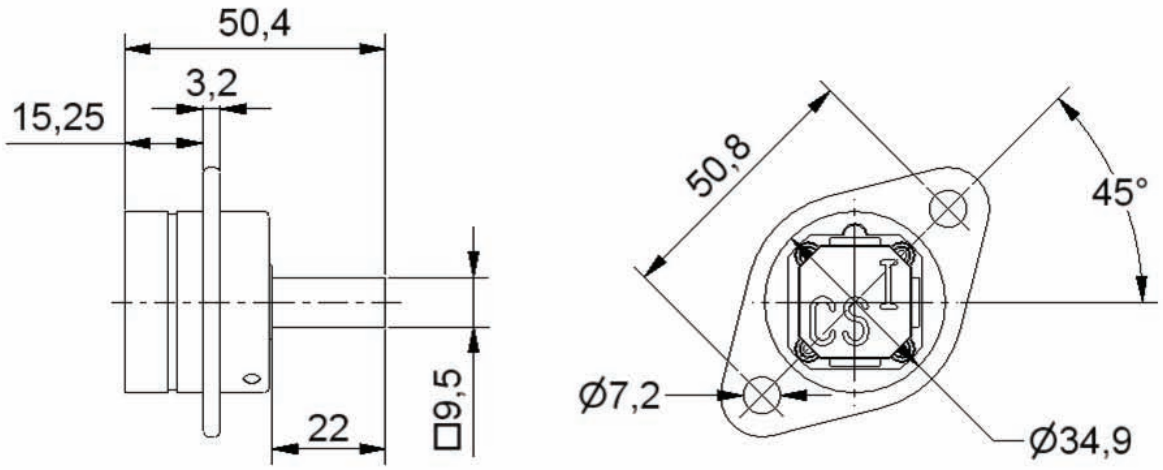


Q1 lock (45° clock wise mount)

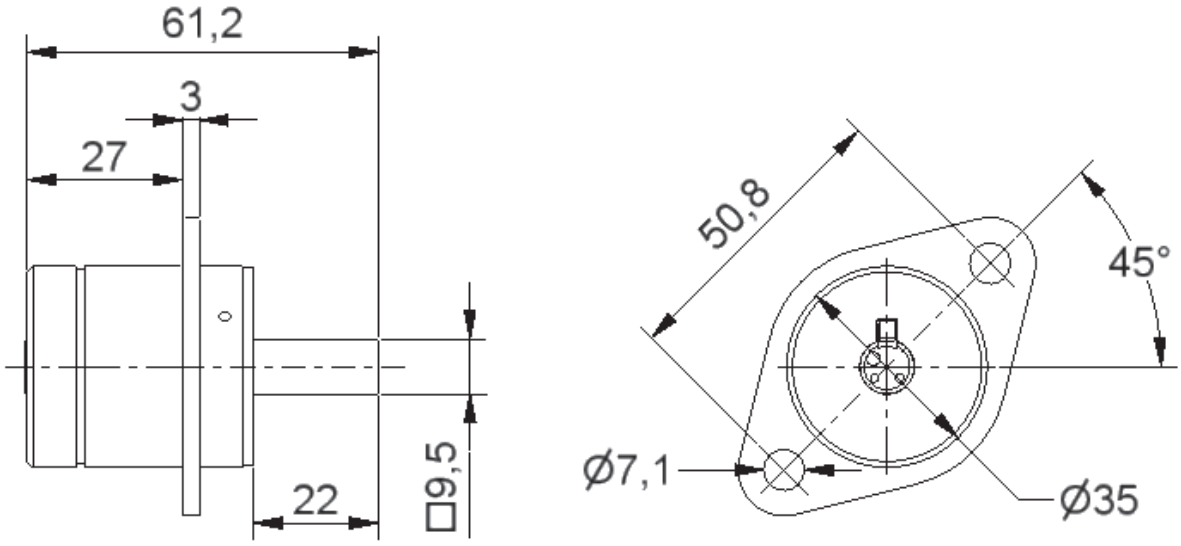


While every effort has been made to ensure the accuracy of the information provided, no liability can be taken for any errors or omission.
Castell Safety International Limited reserves the right to alter specifications and introduce improvements without prior notice.

## Order Information

| | 1 | 2 | 3 | | 4 | | 5 | | 6 | | 7 |
|---|---|---|---|---|---|---|---|---|---|---|---|
| **Part Number** | FS/Q | | | - | | - | | - | | - | |
| **Example** | FS | 1 | B | - | ACW | - | 45 | - | 9.5 | - | 22 |

| 8 |
|---|
| ABC |

| | | |
|---|---|---|
| **1** | **Lock portion type** | FS [1] / Q [1] |
| **2** | **Mounting position** | 1 = 45° clockwise / 2 = 45° anti clockwise [2] |
| **3** | **Material** | B = Brass / S = Stainless steel / PL = Nickel plated |
| **4** | **Rotational movement** | CW = clock wise / ACW = anti clockwise |
| **5** | **Key Rotation (degree movement)** | 45°/ 65°/ 90° |
| **6** | **Spigot square profile** | 9,5 = 9,5 x 9,5 mm (standard) |
| **7** | **Spigot length** | 22 = 22 mm (standard) |
| **8** | **Lock portion symbol** | FS [1] up to 3 characters / Q [1] up to 6 characters |

(1) **F - Lock style** Up to 3 characters **Q - Lock style** Up to 6 characters

(2) **Mounting position**

**1**

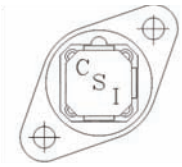

**2**

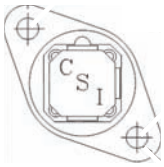

**Special construction available upon enquiry**

## Accessories

| | Product | Part number |
|---|---|---|
| | Flip Cap | FLIP-S |

## Contact Information

Castell Safety International Ltd.
The Castell Building
217 Kingsbury Road
London, England NW9 9PQ

t: +44 (0) 20 8200 1200
f: +44 (0) 20 8905 9378
e: uksales@castell.com

Castell Safety International Ltd.
Oskar-Jäger-Strasse 137
50825 Köln
Germany

t: +49 (0) 221 1649 794
f: +49 (0) 221 1649 795
e: vertrieb@castell.com

Castell Interlocks Inc.
Suite 800
150 N Michigan Avenue,
Chicago, Illinois 60601
USA

t: +1.312.360.1516
f: +1.312.268.5174
e: ussales@castell.com

Castell Safety China
Building 1, No. 123,
Lane 1165, Jindu Road,
Minhang District,
Shanghai 201108, China.

t: +86 21 61519023
f: +86 21 61519030
e: chinasales@castell.com

While every effort has been made to ensure the accuracy of the information provided, no liability can be taken for any errors or omission.
Castell Safety International Limited reserves the right to alter specifications and introduce improvements without prior notice.

# Bolt Interlock

User Manual - Original Language Version

K-FSS-6.4-4

The K Lock is a key operated mechanical bolt interlock that is suitable for the control of electrical switchgear. The standard unit comes with a 15.88 mm diameter bolt available in various lengths, that is used to control the rotation or movement of operating handles or toggles of electrical switchgear. Many suppliers of switchgear equipment have mounting kits available for Castell interlocks. The lock is manufactured in brass or stainless steel making it ideal for use in harsh or corrosive environments.

## Operation

The Castell K bolt interlock range is used in switchgear control to inhibit movement of cams, toggles or levers.

### K bolt interlock, Form 4

① **Key is free, bolt is extended**

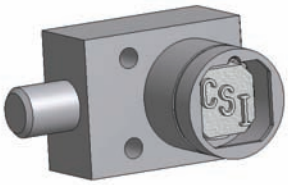

② **Insert and turn key to drive bolt**

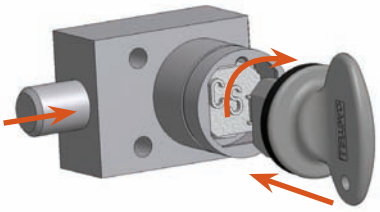

③ **Key is trapped, bolt is retracted**

1. **While the side bolt is extended, the key is free. The mechanism is locked.**
2. **By inserting and turning the key in the bolt interlock, you can retract the bolt, e. g., releasing the disconnector. This will trap the key into the lock.**
3. **The key stays trapped while the bolt is retracted.**

The length of the bolt is available in various lengths to suit the application, but the travel of the bolt is always 19,05 mm. The key is free when the bolt is extended. Insertion and rotation clockwise of the key will retract the bolt. The key will be trapped in the bolt retracted position.

While every effort has been made to ensure the accuracy of the information provided, no liability can be taken for any errors or omission.
Castell Safety International Limited reserves the right to alter specifications and introduce improvements without prior notice.

## Usage

The K bolt interloks are used as a part of a safety system to allow safe control of valves or disconnect switches.

The K bolt interlock is not designed for security purposes, such as a safe or external access to a building.
The K bolt interlock is not designed to interlock access gates or doors. Pleaserefer to AI access interlocks.

No hazardous substances were used in the manufacture of this product. The product can be disposed of in standard waste.

## Installation

The housing of the K bolt interlock should normally be mounted to a panel using suitable fasteners. Please refer to drawing on page 4 for more installation details.

IMPORTANT:
The interlock should be mounted using anti-tamper fasteners to prevent unauthorised removal.

The K bolt interlock must be installed by a competent and qualified person who has read and understood these instructions. Please retain this document in your technical file.

Force required to shear lock bolt is 30KN for stainless steel and 19KN for brass interlocks.

## Maintenance

Periodic visual checks should be carried out by the site manager / safety officer.
Do not lubricate lock barrel with oil or grease, use CK Dry Powder Graphite if necessary.

In case of defects beeing detected please contact your nearest Castell Support Department for further actions.
Please see Contact section for contact details.

While every effort has been made to ensure the accuracy of the information provided, no liability can be taken for any errors or omission.
Castell Safety International Limited reserves the right to alter specifications and introduce improvements without prior notice.

## Technical Data

| | |
|---|---|
| **Temperature rating** | Minimum: -40°C [-40°F] ice free for Q & FS Type |
| | Maximum: 107°C [224,6°F] for Q Type/140°C [284°F] for FS Type |
| **Type of mounting** | Surface mount using suitable fasteners (please refer to drawing on page 4 for more details) |
| **Weight** | Brass: 0,7 kg |
| | Stainless steel: 0,7 kg |
| **Material** | Brass/Stainless steel |
| **MTTF Certification** | Available on request |

## Application

The K bolt interloks are used as a part of a safety system to allow safe control of valves or disconnect switches.

While power supply to the system is switched on, the access doors to the hazardous area are locked closed. Key A is trapped in the disconnector K bolt intertlock (1) while the process is on.

To enter the hazardous area, the disconnector is turned to the off position and key A is released, locking the disconnector in the disengaged position.

Key A is then taken to the grounding switch. Key A enters the second K lock (2) which retracts the bolt enabling the cammed switch lever to be rotated to engage the ground. Once rotated, the recess in the cam aligns with the next K lock (3) with key B trapped in its lock. Key B can now be removed from K lock (3), which now locks the lever in place ensuring that the ground connection cannot be broken.

The system is now disconnected and grounded, key B can be taken to operate the access interlock on the door of the hazardous area to gain access into it.

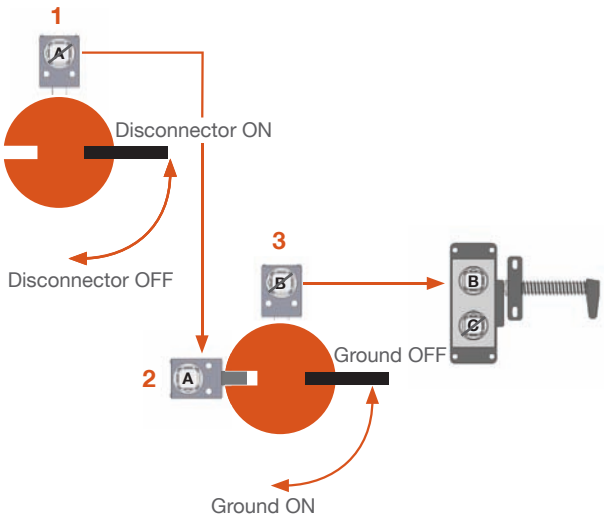


## EC-Declaration

We, the manufacturers, declare that the components, detailed herein and placed on the market, comply with all the essential health and safety requirements applying to them.

Empowered signatory:

Mr T.C. Whelan
Managing Director

While every effort has been made to ensure the accuracy of the information provided, no liability can be taken for any errors or omission.
Castell Safety International Limited reserves the right to alter specifications and introduce improvements without prior notice.

## Drawing

Dimensions:
**in mm**

***Note:*** *For safe mounting, use security screws*

K, form 4

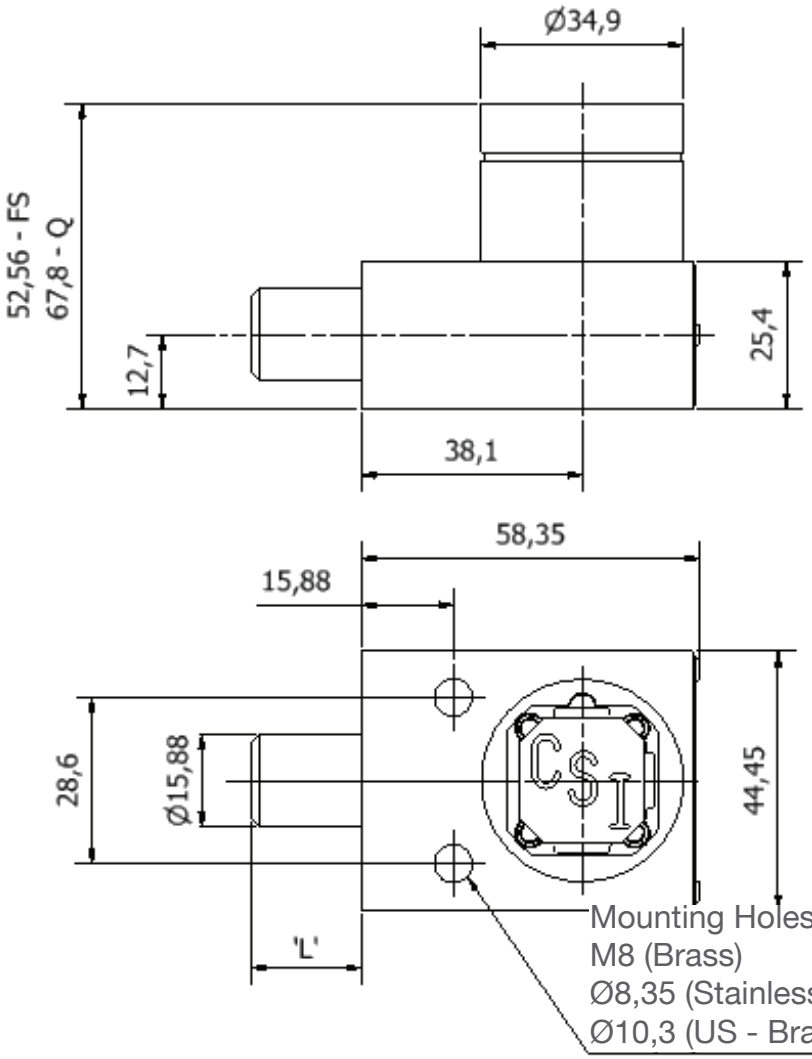


| **L Dimension Retracted bolt length (in mm)** | Extended bolt length (in mm) |
|---|---|
| **0** | 19,05 |
| **6,35** | 25,40 |
| **12,70** | 31,75 |
| **19,05** | 38,10 |
| **25,40** | 44,45 |

While every effort has been made to ensure the accuracy of the information provided, no liability can be taken for any errors or omission.
Castell Safety International Limited reserves the right to alter specifications and introduce improvements without prior notice.

# Bolt Interlock

User Manual - Original Language Version

## Order Information

| | Product Type | - | 1 | 2 | - | 3 | - | 4 |
|---|---|---|---|---|---|---|---|---|
| Part Number | K | - | | | - | | - | |
| Example | K | - | FS | B | - | 6,4 | - | 1 |

| 5 |
|---|
| ABC |

| | | |
|---|---|---|
| 1 | **Lock portion type** | FS (1) / Q (1) |
| 2 | **Material** | B = Brass / S = Stainless steel |
| 3 | **L Dimension (bolt length when retracted) in mm** | 0 / 6,4 / 12,7 / 19,1 / 25,4 |
| 4 | **Form** | 1 / 2 / 3 / 4 (2) |
| 5 | **Lock portion symbol** | FS (1) up to 3 characters / Q (1) up to 6 characters |

(1) **FS - Lock type** Up to 3 characters

**Q - Lock type** Up to 6 characters

(2) **Form**

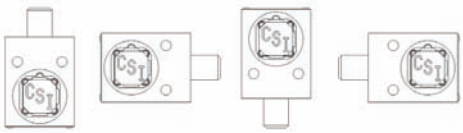


## Accessories

**Special construction available upon enquiry**

| | Product | Part number |
|---|---|---|
| | Flip Cap | FLIP-S |

## Contact Information

Castell Safety International Ltd.
The Castell Building
217 Kingsbury Road
London, England NW9 9PQ

t: +44 (0) 20 8200 1200
f: +44 (0) 20 8905 9378
e: uksales@castell.com

Castell Safety International Ltd.
Oskar-Jäger-Strasse 137
50825 Köln
Germany

t: +49 (0) 221 1649 794
f: +49 (0) 221 1649 795
e: vertrieb@castell.com

Castell Interlocks Inc.
Suite 800
150 N Michigan Avenue,
Chicago, Illinois 60601
USA

t: +1.312.360.1516
f: +1.312.268.5174
e: ussales@castell.com

Castell Safety China
Building 1, No. 123,
Lane 1165, Jindu Road,
Minhang District,
Shanghai 201108, China.

t: +86 21 61519023
f: +86 21 61519030
e: chinasales@castell.com

While every effort has been made to ensure the accuracy of the information provided, no liability can be taken for any errors or omission.
Castell Safety International Limited reserves the right to alter specifications and introduce improvements without prior notice.

K-FSS (Form 4)

The KC Lock is a key operated mechanical bolt interlock suitable for the control of electrical switchgear. The standard unit comes with a 16 mm diameter bolt fitted with a claw, that is used to control the rotation or movement of the operating handles or toggles of electrical switchgear. The bolt length and claw dimensions are variable to suit the particular requirement. The lock is manufactured in brass or stainless steel making it ideal for use in harsh or corrosive environments.

## Operation

The Castell claw interlocks range is used in switchgear control to lock off power supply and control accesses to hazardous areas.

### K Bolt Interlock, Form 4

1. **Key is trapped, bolt is retracted. Switch is unlocked or in ON position.**
2. **Turn and release key to extend the bolt and lock the switch in OFF position.**
3. **Key is free, bolt is extended and switch is locked OFF.**

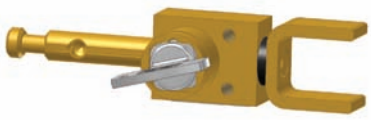

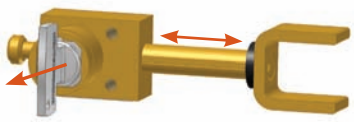

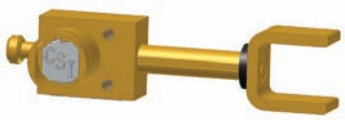

1. **While the side bolt is retracted, the switch is in ON position. The mechanism is unlocked while the key is trapped.**
2. **By turning and releasing the key, you can manually extend the bolt, locking the switch in OFF position.**
3. **The released key can be used to access a hazardous area via an access interlock. The switch cannot be unlocked and switched on until the key is repalced in the KC claw interlock.**

The standard KC claw interlock comes with a 16mm diameter bolt fitted with a claw. The bolt length and claw dimensions are variable and need to eb advised when ordering.

While every effort has been made to ensure the accuracy of the information provided, no liability can be taken for any errors or omission.
Castell Safety International Limited reserves the right to alter specifications and introduce improvements without prior notice.

## Usage

The KC claw interlock is designed to be part of a safety system and is used to lock off switches which then allows to gain access to a hazardous area.

The KC claw interlock is not designed for security purposes, such as external access to a building.

No hazardous substances were used in the manufacture of this product. The product can be disposed of in standard waste.

## Installation

The housing of the KC claw interlock should normally be mounted to a panel using suitable fasteners (please refer to drawing on page 4 for more details)

IMPORTANT:
The interlock should be mounted using anti-tamper fasteners to prevent unauthorised removal.

The KC claw interlock must be installed by a competent and qualified person who has read and understood these instructions. Please retain this document in your technical file.

## Maintenance

Periodic visual checks should be carried out by the site manager / safety officer.
Do not lubricate lock barrel with oil or grease, use CK Dry Powder Graphite if necessary.

In case of defects beeing detected please contact your nearest Castell Support Department for further actions.
Please see Contact section for contact details.

While every effort has been made to ensure the accuracy of the information provided, no liability can be taken for any errors or omission.
Castell Safety International Limited reserves the right to alter specifications and introduce improvements without prior notice.

## Technical Data

| | |
|---|---|
| **Temperature rating** | Minimum: -40°C [-40°F] ice free for Q & FS Type |
| | Maximum: 107°C [224,6°F] for Q Type/140°C [284°F] for FS Type |
| **Type of mounting** | surface mount using suitable fasteners (please refer to drawing on page 4 for more details) |
| **Weight** | N/A |
| **Material** | Brass/Stainless steel |
| **MTTF Certification** | Available on request |

## Application

The Castell KC claw interlock is used as apart of a safety system, typically in machine guarding applications. It is usually used in combination with an Access Interlock such as the Salus for part body access or an Access Interlock with an exchange key for full body access control.

While the power supply is switched on, the key is trapped in the KC claw interlock. To lock off the power supply switch, drive the bolt to extended position. This will release the key keeping the bolt extended and the switch locked off. The key is released and taken by the personnell to unlock the AI access interlock on the HV cabinet. While the access door is opened, the key remains trapped in the AI lock.

The system has to be designed so that the bolt of the KC claw interlock cannot be retracted to unlock the power supply until the door to the HV cabinet is locked, the key removed from AI access lock and the replaced into the KL claw interlock.

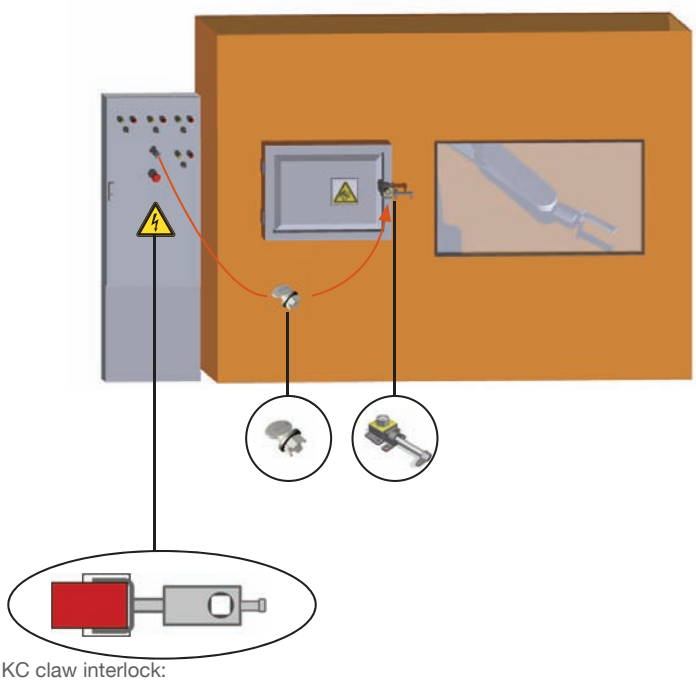

KC claw interlock:
Switch locked OFF (bolt extended), key released

## EC-Declaration

We, the manufacturers, declare that the components, detailed herein and placed on the market, comply with all the essential health and safety requirements applying to them.

Empowered signatory:

Mr T.C. Whelan
Managing Director

While every effort has been made to ensure the accuracy of the information provided, no liability can be taken for any errors or omission.
Castell Safety International Limited reserves the right to alter specifications and introduce improvements without prior notice.

## Drawing

Dimensions:
**in mm**

***Note:*** *For safe mounting, use security screws*

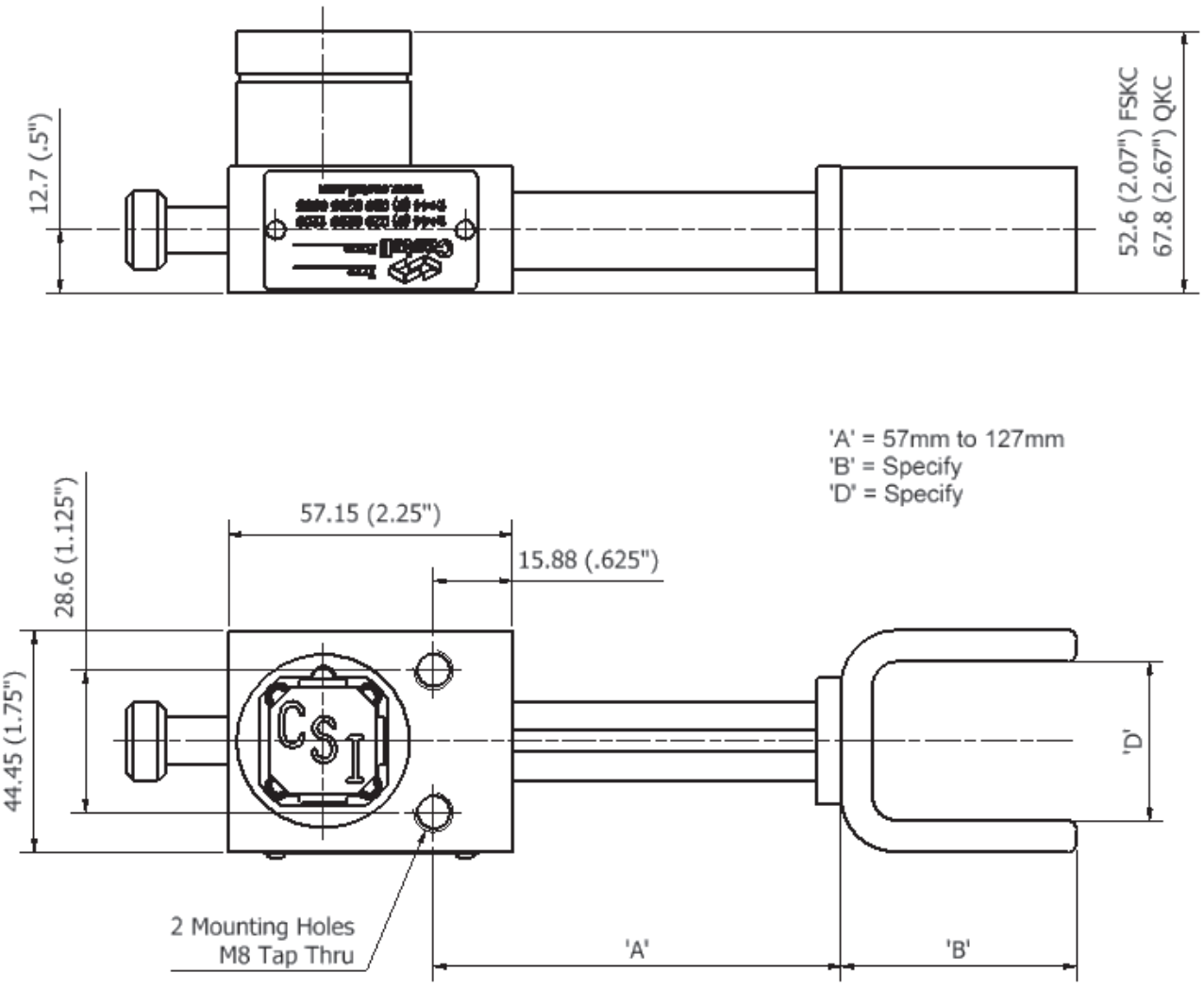


While every effort has been made to ensure the accuracy of the information provided, no liability can be taken for any errors or omission.
Castell Safety International Limited reserves the right to alter specifications and introduce improvements without prior notice.

## Order Information

| | Product Type | - | 1 | 2 | - | 3 |
|---|---|---|---|---|---|---|
| Part Number | KC | - | | | - | |
| Example | KC | - | FS | B | - | 4 |

**4**
19.1mm A Dimension

**5**
60mm B Dimension

**6**
28.9mm D Dimension

**7**
ABC Lock Portion Symbol

| | | |
|---|---|---|
| 1 | **Lock portion type** | FS (1) / Q (1) |
| 2 | **Material** | B = Brass / S = Stainless steel |
| 3 | **Form** | 1 / 2 / 3 / 4 (2) |
| 4 | **A dimension (bolt travel)** | please specify: from 57mm to 127mm |
| 5 | **B dimension (see page 4 for claw details)** | please specify |
| 6 | **D dimension (see page 4 for claw details)** | please specify |
| 7 | **Lock portion symbol** | FS (1) up to 3 characters / Q (1) up to 6 characters |

(1) **FS - Lock type** Up to 3 characters **Q - Lock type** Up to 6 characters

(2) **Form**

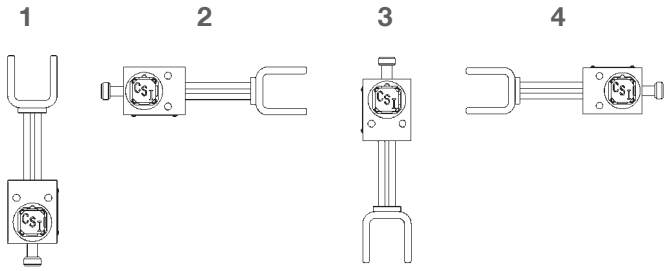


**Special construction available upon enquiry**

## Contact Information

Castell Safety International Ltd.
The Castell Building
217 Kingsbury Road
London, England NW9 9PQ

t: +44 (0) 20 8200 1200
f: +44 (0) 20 8905 9378
e: uksales@castell.com

Castell Safety International Ltd.
Oskar-Jäger-Strasse 137
50825 Köln
Germany

t: +49 (0) 221 1649 794
f: +49 (0) 221 1649 795
e: vertrieb@castell.com

Castell Interlocks Inc.
Suite 800
150 N Michigan Avenue,
Chicago, Illinois 60601
USA

t: +1.312.360.1516
f: +1.312.268.5174
e: ussales@castell.com

Castell Safety China
Building 1, No. 123,
Lane 1165, Jindu Road,
Minhang District,
Shanghai 201108, China.

t: +86 21 61519023
f: +86 21 61519030
e: chinasales@castell.com

While every effort has been made to ensure the accuracy of the information provided, no liability can be taken for any errors or omission.
Castell Safety International Limited reserves the right to alter specifications and introduce improvements without prior notice.

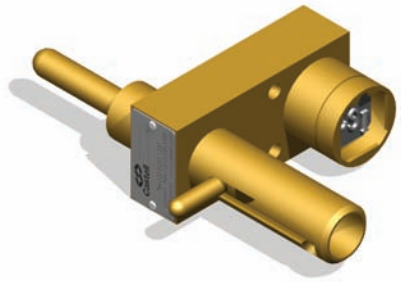

KE-FSB-6.4-4

The KE lock is a one piece access interlock comprising of a main body and sliding bolt. The lock is designed to suit sliding doors of various sizes and thicknesses. The interlock is manufactured in brass and comes with the brass figure or Q type lock portions and is ideal for use in dry, non-corrosive environments where the lock is subject to medium to heavy use. Typical industries using the KE lock are automotive and steel production.

## Operation

The Castell KE sliding door interlock range is used in switchgear control to inhibit movement of cams, toggles or levers.

### KE sliding door lock, Form 4

① **Key is free, bolt is extended**

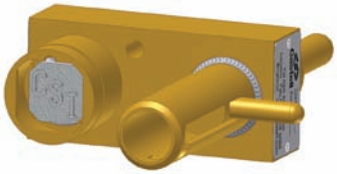

② **Insert and turn key to drive bolt**

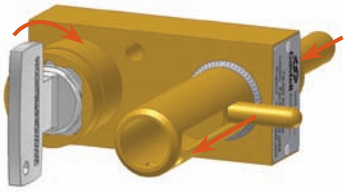

③ **Key is trapped, bolt is retracted**

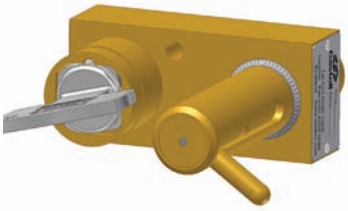

1. **While the side bolt is extended, the key is free and usually held in the power isolation unit.**
2. **Inserting and turning the key in the KE door interlock allows the bolt to retract unlocking the access door to the machine area. This will trap the key in the lock.**
3. **The key stays trapped while the bolt is retracted.**

The length of the bolt is 50,8mm. The key is free when the bolt is extended. Insertion and rotation clockwise of the key will retract the bolt. The key will be trapped in the bolt retracted position.

While every effort has been made to ensure the accuracy of the information provided, no liability can be taken for any errors or omission.
Castell Safety International Limited reserves the right to alter specifications and introduce improvements without prior notice.

## Usage

The KE sliding door lock should be used to allow safe control of sliding doors.

The KE lock is not designed for security purposes, such as a safe or external access to a building.

No hazardous substances were used in the manufacture of this product. The product can be disposed of in standard waste.

## Installation

The housing of the KE sliding door lock should normally be mounted to a panel using suitable fasteners. See drawing on page 4 for more installation details.

IMPORTANT:
The interlock should be mounted using anti-tamper fasteners to prevent unauthorised removal.

The KE sliding door lock must be installed by a competent and qualified person who has read and understood these instructions. Please retain this document in your technical file.

Force required to shear lock bolt is 19KN.

## Maintenance

Periodic visual checks should be carried out by the site manager / safety officer.
Do not lubricate lock barrel with oil or grease, use CKE Dry Powder Graphite if necessary.

In case of defects beeing detected please contact your nearest Castell Support Department for further actions.
Please see Contact section for contact details.

While every effort has been made to ensure the accuracy of the information provided, no liability can be taken for any errors or omission.
Castell Safety International Limited reserves the right to alter specifications and introduce improvements without prior notice.

## Technical Data

| | |
|---|---|
| **Temperature rating** | Minimum: -40°C [-40°F] ice free for Q & FS Type |
| | Maximum: 107°C [224,6°F] for Q Type/140°C [284°F] for FS Type |
| **Type of mounting** | Surface mount using suitable fasteners (please refer to drawing on page 4 for more details) |
| **Weight** | Brass: 0,7 kg |
| **Material** | Brass/Stainless steel |
| **MTTF Certification** | Available on request |

## Application

The KE bolt interlocks are used as a apart of a safety system, typically in machine guarding applications.

The power supply to the system is switched on and the access door to the hazardous area is locked closed.

The removal of the isolation key in the KS20, isolates the electrical supply to the LV Panel. This key is then used to unlock the KE sliding door interlock interlock on the sliding door.

The power cannot be switched on until the door is closed, the bolt is trapped in the KE sliding door interlock and the key returned to the KS20.

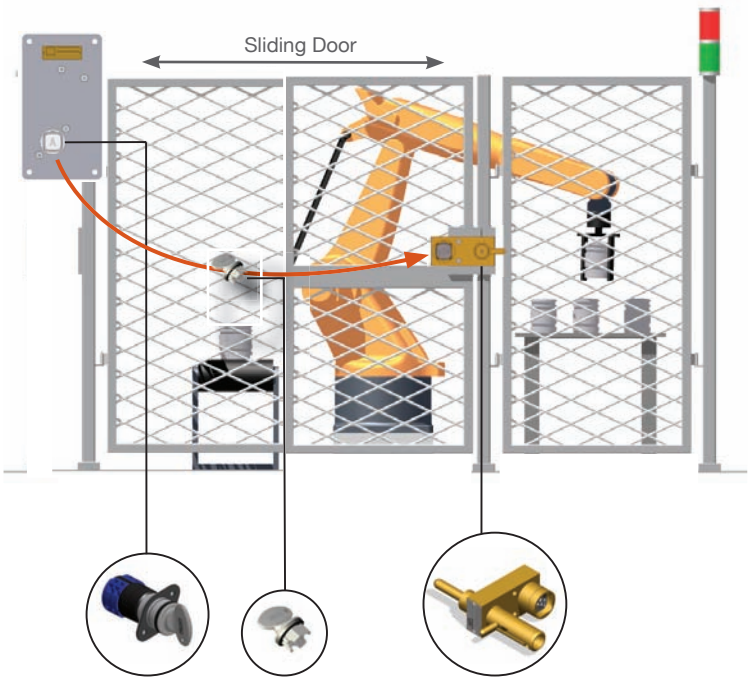


## EC-Declaration

We, the manufacturers, declare that the components, detailed herein and placed on the market, comply with all the essential health and safety requirements applying to them.

Empowered signatory:

Mr T.C. Whelan
Managing Director

While every effort has been made to ensure the accuracy of the information provided, no liability can be taken for any errors or omission.
Castell Safety International Limited reserves the right to alter specifications and introduce improvements without prior notice.

## Drawing

Dimensions:
**in mm**

***Note:*** *For safe mounting, use security screws*

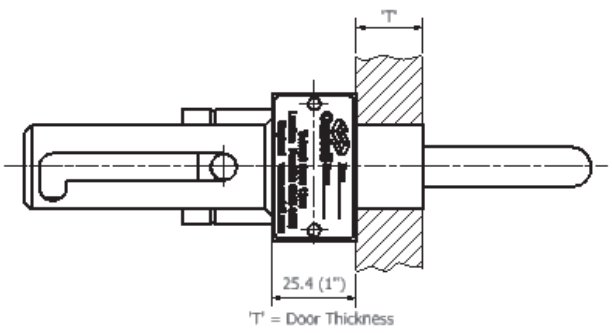


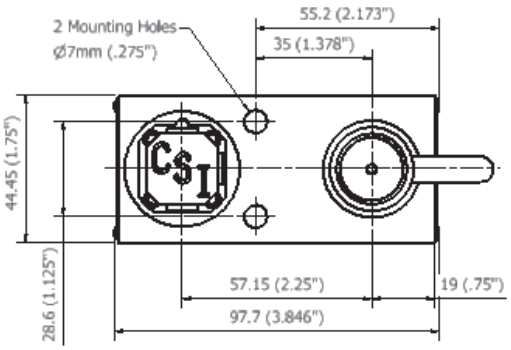


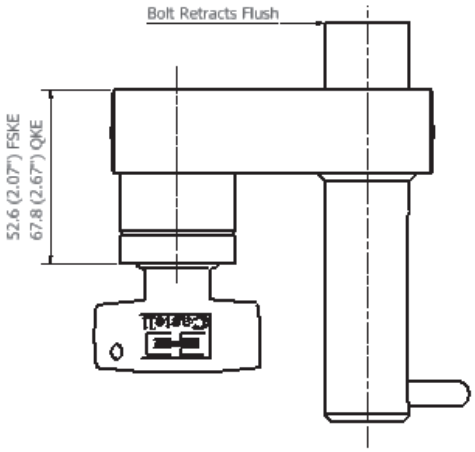


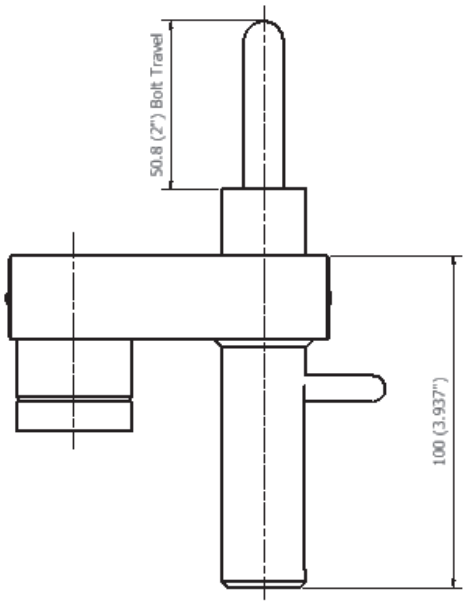


While every effort has been made to ensure the accuracy of the information provided, no liability can be taken for any errors or omission.
Castell Safety International Limited reserves the right to alter specifications and introduce improvements without prior notice.

## Order Information

| | Product Type | 1 | 2 | 3 |
|---|---|---|---|---|
| Part Number | KE | - | | - |
| Example | KE | - FS | B | - 1 |

| 4 |
|---|
| 9mm |

| 5 |
|---|
| ABC |

| | | |
|---|---|---|
| 1 | Lock portion type | FS (1) / Q (1) |
| 2 | Material | B = Brass (standard) |
| 4 | Form | 1 / 2 / 3 / 4 (2) |
| 5 | Door thinckness | please advise |
| 6 | Lock portion symbol | FS (1) up to 3 characters / Q (1) up to 6 characters |

(1) **FS - lock type** Up to 3 characters **Q - lock type** Up to 6 characters

(2) **Form** 1 2 3 4

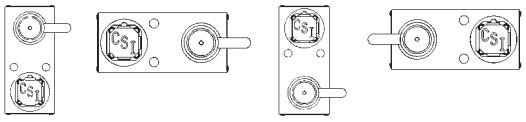

**Special construction available upon enquiry**

## Accessories

| | Product | Part number |
|---|---|---|
| | Flip Cap | FLIP-S |

## Contact Information

Castell Safety International Ltd.
The Castell Building
217 KEingsbury Road
London, England NW9 9PQ

t: +44 (0) 20 8200 1200
f: +44 (0) 20 8905 9378
e: uksales@castell.com

Castell Safety International Ltd.
Oskar-Jäger-Strasse 137
50825 KEöln
Germany

t: +49 (0) 221 1649 794
f: +49 (0) 221 1649 795
e: vertrieb@castell.com

Castell Interlocks Inc.
Suite 800
150 N Michigan Avenue,
Chicago, Illinois 60601
USA

t: +1.312.360.1516
f: +1.312.268.5174
e: ussales@castell.com

Castell Safety China
Building 1, No. 123,
Lane 1165, Jindu Road,
Minhang District,
Shanghai 201108, China.

t: +86 21 61519023
f: +86 21 61519030
e: chinasales@castell.com

While every effort has been made to ensure the accuracy of the information provided, no liability can be taken for any errors or omission.
Castell Safety International Limited reserves the right to alter specifications and introduce improvements without prior notice.

FKW6-S

A selection of keys is available to suit a range of applications, from the basic nickel plated key to the stainless steel sealing key. The F range of keys fit the figure style lock portion whilst the Q range fits the Q style lock portion.

## Operation

Two different types of keys are available: F range for figure style and Q range for Q style lock portions:

### F keys (Figure style)

- Stainless steel, brass and plated range of keys
- Customised coding
- **SYMBOL (CODE) TO BE ADVISED WHEN ORDERING**
  - select up to 3 characters
  - any alpha- (A-Z) and numeric (0-9) configurations
  - do not use letter O, use Zero instead
  - do not use lower case
  - for spacing as a character advise TABLET (submaster key)*
- 47,988 code options available
- Master and submaster keys available*

### Q keys (Q style)

- Stainless steel, brass and plated range of keys
- Customised coding
- **SYMBOL (CODE) TO BE ADVISED WHEN ORDERING**
  - select up to 6 characters
  - any alpha- (A-Z) and numeric (0-9) configurations
  - additional, non alphanumeric characters available: (*), (/), (-) and (_)
  - do not use letter O, use Zero instead
  - do not use lower case
- over 3,6 billion code options available
- Recorded in internal data base to avoid duplications

***The disclaimer on page 2 applies when ordering master, submaster and spare keys**

While every effort has been made to ensure the accuracy of the information provided, no liability can be taken for any errors or omission.
Castell Safety International Limited reserves the right to alter specifications and introduce improvements without prior notice.

## Disclaimer

**IMPORTANT:**

We must draw your attention to the potential danger of issuing spare, master or submaster keys.

**Trapped key interlocks control procedural events in a strict sequence. If this sequence is altered. through the use of spare or master keys, the integrity of your safety system may be compromised, possibly resulting in serious or even fatal injury to persons or damage to processes and plant.**

In the wrong hands, spare or master keys could expose person(s) to the very hazard from which the interlocking system is intended to protect them.

## Technical Data

| | |
|---|---|
| **Temperature rating** | Minimum: -40°C [-40°F] ice free for Q & F Type |
| | Maximum: 107°C [224,6°F] for Q Type/140°C [284°F] for F Type |
| **Type of mounting** | M6 |
| **Weight** | 0,1 kg |
| **Material** | Stainless steel/brass /nickel plated/chome plated/nylon coated |

## EC-Declaration

We, the manufacturers, declare that the components, detailed herein and placed on the market, comply with all the essential health and safety requirements applying to them.

Empowered signatory:

Mr T.C. Whelan
Managing Director

While every effort has been made to ensure the accuracy of the information provided, no liability can be taken for any errors or omission.
Castell Safety International Limited reserves the right to alter specifications and introduce improvements without prior notice.

## F Keys

**FK4-NI /**
**FK4-MASTER**

**FKW6-S /**
**FKW6-S-MASTER**

**FKW6-NI**

**FKW3-RED**

**KSD-R**

**CL1062**

**006512**

**SHORT KEY /**
**SHORT KEY-ENG BOTHSIDE**

| Order Information/ Part Number | Description |
|---|---|
| **FK4-NI** | FK4 NICKEL PLATED KEY |
| **FK4-MASTER** | FK4 MASTER KEY |
| **FKW6-S** | FKW6 STAINLESS STEEL SEALING KEY |
| **FKW6-S-MASTER** | FKW6 STAINLESS STEEL MASTER KEY |
| **FKW6-NI** | FKW6 NICKEL PLATED SEALING KEY |
| **FKW3-RED** | FKW3 T HANDLE SEALING KEY RED NYLON COATED |
| **KSD-R** | SWITCH DISCONNECTOR KEY |
| **006512** | SALVO KEY - FKW6-S KEY COMLETE WITH ID TAG |
| **CL1062** | MERLIN GERIN KEY SK20165 MASTER PACT RANGE |
| **SHORT KEY** | SCHNEIDER AND ABB SWITCHGEAR APPLICATIONS KEY, NICKEL PLATED |

Special keys available upon enquiry

**The disclaimer on page 2 applies when ordering master, submaster and spare keys**

While every effort has been made to ensure the accuracy of the information provided, no liability can be taken for any errors or omission.
Castell Safety International Limited reserves the right to alter specifications and introduce improvements without prior notice.

## Q Keys

QS-S

QS-B

QS-NI

| Order Information/ Part Number | Description |
|---|---|
| QS-S | QS KEY - STAINLESS STEEL |
| QS-B | QS PLAIN BRASS Q KEY |
| QS-NI | QS KEY - NICKEL PLATED |

Special keys available upon enquiry

**The disclaimer on page 2 applies when ordering spare keys**

While every effort has been made to ensure the accuracy of the information provided, no liability can be taken for any errors or omission.
Castell Safety International Limited reserves the right to alter specifications and introduce improvements without prior notice.

## Drawings

### F Keys

Dimensions:
**in mm**

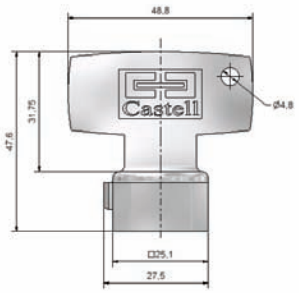


**FK4-NI / FK4-MASTER**

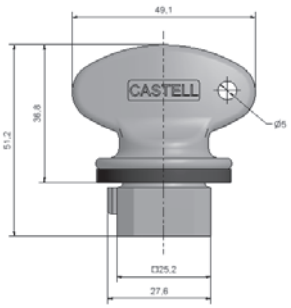


**FKW6-S / FKW6-S-MASTER**

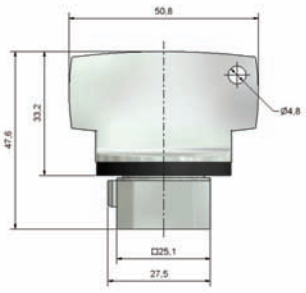


**FKW6-NI**

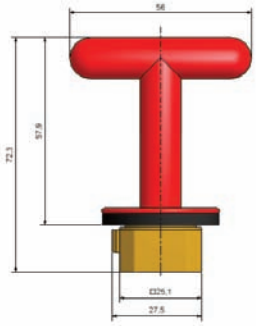


**FKW3-RED**

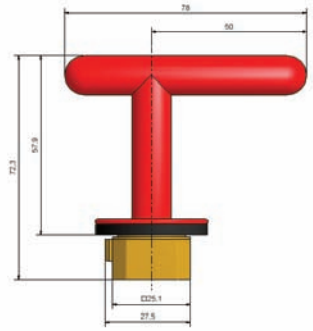


**KSD-R**

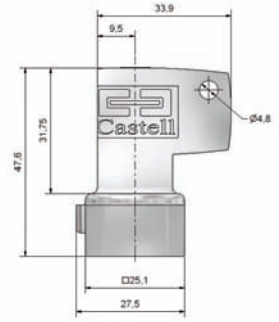


**CL1062**

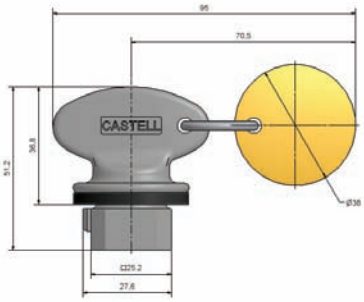


**006512**

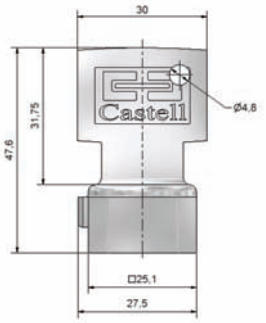


**SHORT KEY**

While every effort has been made to ensure the accuracy of the information provided, no liability can be taken for any errors or omission.
Castell Safety International Limited reserves the right to alter specifications and introduce improvements without prior notice.

## Drawings

### Q Keys

Dimensions:
**in mm**

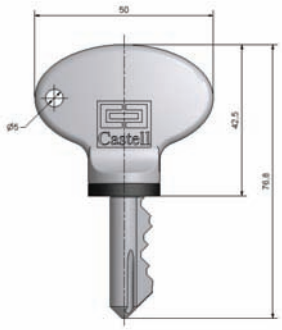


**QS-S**

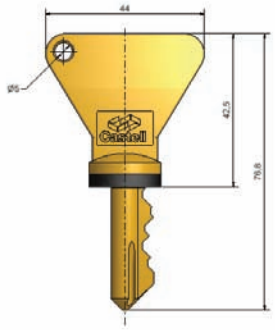


**QS-B**

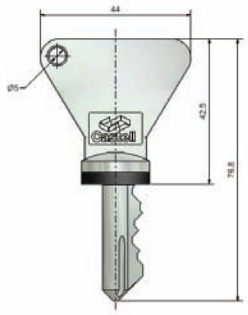


**QS-NI**

## Contact Information

Castell Safety International Ltd.
The Castell Building
217 Kingsbury Road
London, England NW9 9PQ

t: +44 (0) 20 8200 1200
f: +44 (0) 20 8905 9378
e: uksales@castell.com

Castell Safety International Ltd.
Oskar-Jäger-Strasse 137
50825 Köln
Germany

t: +49 (0) 221 1649 794
f: +49 (0) 221 1649 795
e: vertrieb@castell.com

Castell Interlocks Inc.
Suite 800
150 N Michigan Avenue,
Chicago, Illinois 60601
USA

t: +1.312.360.1516
f: +1.312.268.5174
e: ussales@castell.com

Castell Safety China
Building 1, No. 123,
Lane 1165, Jindu Road,
Minhang District,
Shanghai 201108, China.

t: +86 21 61519023
f: +86 21 61519030
e: chinasales@castell.com

While every effort has been made to ensure the accuracy of the information provided, no liability can be taken for any errors or omission.
Castell Safety International Limited reserves the right to alter specifications and introduce improvements without prior notice.

# KF

# Bolt Interlock with Flange

User Manual - Original Language Version

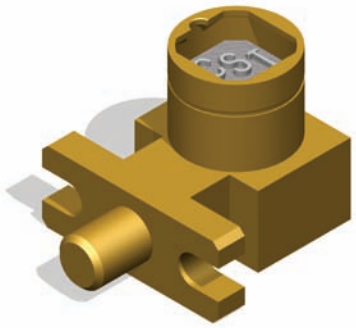

KF-FSB-6.4-4

The KF Lock is a key operated mechanical bolt interlock for the control of electrical switchgear. The standard unit comes with a 16 mm diameter bolt of variable length, that is used to control the rotation or movement of operating handles or toggles of electrical switchgear. The KF interlock comes equipped with a flange to allow for different sorts of mounting. This lock is manufactured in brass or stainless steel making it ideal for use in harsh or corrosive environments.

## Operation

The Castell KF bolt interlock range is used in switchgear control to inhibit movement of cams, toggles or levers.

### KF bolt interlock, Form 4

① **Key is free, bolt is extended**

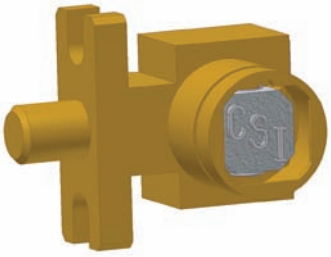

② **Insert and turn key to drive bolt**

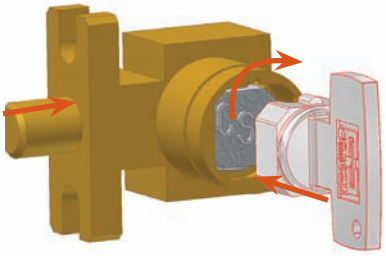

③ **Key is trapped, bolt is retracted**

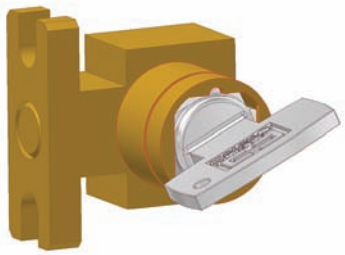

1. **While the side bolt is extended, the key is free. The mechanism is locked.**
2. **By inserting and turning the key in the bolt interlock, you can retract the bolt, e. g., releasing the disconnector. This will trap the key into the lock.**
3. **The key stays trapped while the bolt is retracted.**

The length of the bolt is available in various lengths to suit the application, but the travel of the bolt is always 19,05 mm. The key is free when the bolt is extended. Insertion and rotation clockwise of the key will retract the bolt. The key will be trapped in the bolt retracted position.

While every effort has been made to ensure the accuracy of the information provided, no liability can be taken for any errors or omission.
Castell Safety International Limited reserves the right to alter specifications and introduce improvements without prior notice.

## Usage

The KF bolt interloks are used as a part of a safety system to allow safe control of valves or disconnect switches.

The KF bolt interlock is not designed for security purposes, such as a safe or external access to a building.
The KF bolt interlock is not designed to interlock access gates or doors. Pleaserefer to AI access interlocks.

No hazardous substances were used in the manufacture of this product. The product can be disposed of in standard waste.

## Installation

The housing of the KF bolt interlock should normally be mounted to a panel using suitable fasteners. Please refer to drawing on page 4 for more installation details.

IMPORTANT:
The interlock should be mounted using anti-tamper fasteners to prevent unauthorised removal.

The KF bolt interlock must be installed by a competent and qualified person who has read and understood these instructions. Please retain this document in your technical file.

Force required to shear lock bolt is 30KN for stainless steel and 19KN for brass interlocks.

## Maintenance

Periodic visual checks should be carried out by the site manager / safety officer.
Do not lubricate lock barrel with oil or grease, use CK Dry Powder Graphite if necessary.

In case of defects beeing detected please contact your nearest Castell Support Department for further actions.
Please see Contact section for contact details.

While every effort has been made to ensure the accuracy of the information provided, no liability can be taken for any errors or omission.
Castell Safety International Limited reserves the right to alter specifications and introduce improvements without prior notice.

## Technical Data

| | |
|---|---|
| **Temperature rating** | Minimum: -40°C [-40°F] ice free for Q & FS Type |
| | Maximum: 107°C [224,6°F] for Q Type/140°C [284°F] for FS Type |
| **Type of mounting** | Surface mount using suitable fasteners (please refer to drawing on page 4 for more details) |
| **Weight** | Brass: 0,7 kg |
| | Stainless steel: 0,7 kg |
| **Material** | Brass/Stainless steel |
| **MTTF Certification** | Available on request |

## Application

The KF bolt interlocks are used as a part of a safety system to allow safe control of valves or disconnect switches.

While power supply to the system is switched on, the access doors to the hazardous area are locked closed. Key A is trapped in the disconnector KF bolt intertlock (1) while the process is on.

To enter the hazardous area, the disconnector is turned to the off position and key A is released, locking the disconnector in the disengaged position.

Key A is then taken to the grounding switch. Key A enters the second KF lock (2) which retracts the bolt enabling the cammed switch lever to be rotated to engage the ground. Once rotated, the recess in the cam aligns with the next KF lock (3) with key B trapped in its lock. Key B can now be removed from KF lock (3), which now locks the lever in place ensuring that the ground connection cannot be broken.

The system is now disconnected and grounded, key B can be taken to operate the access interlock on the door of the hazardous area to gain access into it.

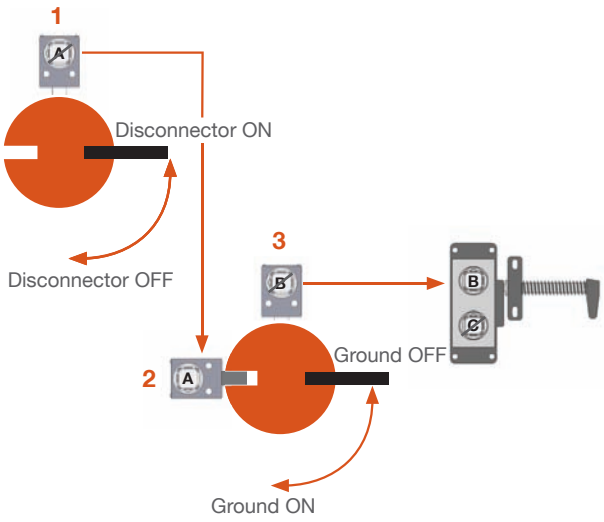


## EC-Declaration

We, the manufacturers, declare that the components, detailed herein and placed on the market, comply with all the essential health and safety requirements applying to them.

Empowered signatory:

Mr T.C. Whelan
Managing Director

While every effort has been made to ensure the accuracy of the information provided, no liability can be taken for any errors or omission.
Castell Safety International Limited reserves the right to alter specifications and introduce improvements without prior notice.

## Drawing

Dimensions:
**in mm**

***Note:*** *For safe mounting, use security screws*

KF, form 4

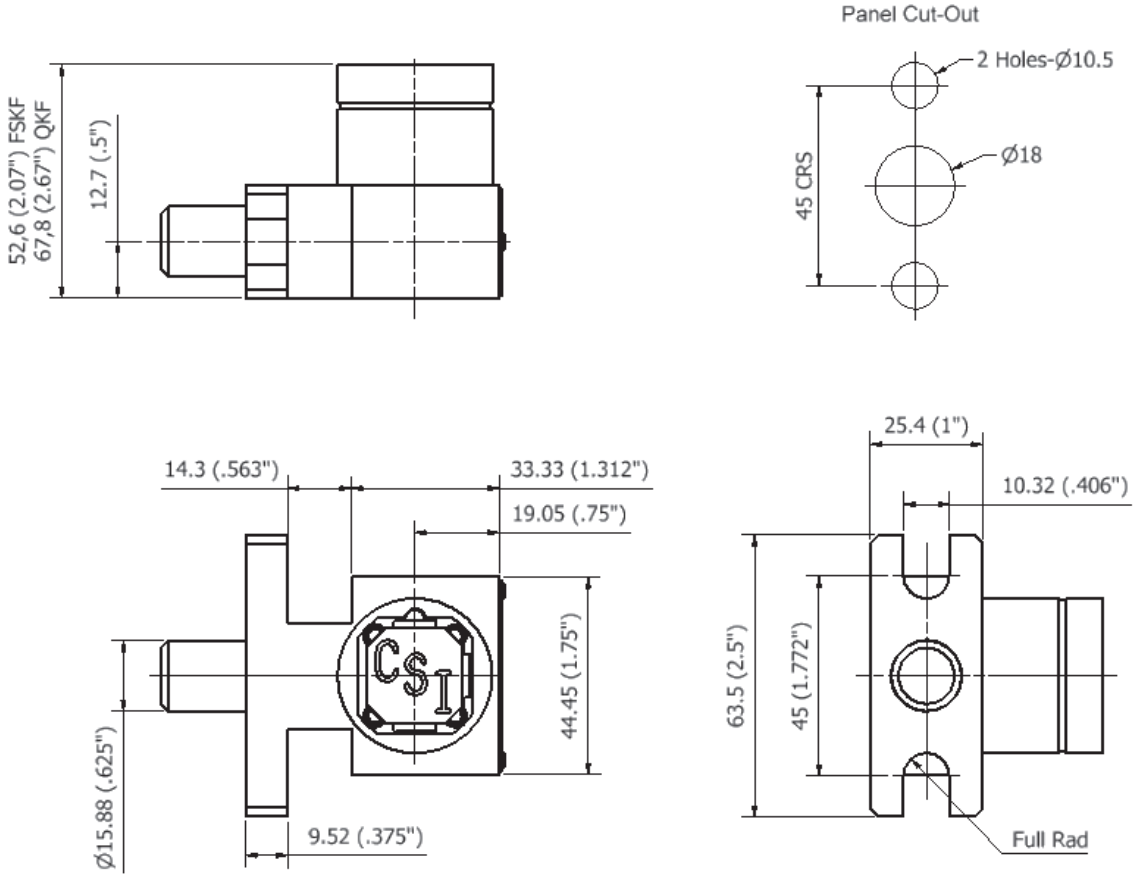


Mounting Holes:
M8 (Brass)
Ø8,35 (Stainless steel)
Ø10,3 (US - Brass/Stainless Steel)

| **L Dimension Retracted bolt length (in mm)** | Extended bolt length (in mm) |
|---|---|
| **0** | 19,05 |
| **6,35** | 25,40 |
| **12,70** | 31,75 |
| **19,05** | 38,10 |
| **25,40** | 44,45 |

While every effort has been made to ensure the accuracy of the information provided, no liability can be taken for any errors or omission.
Castell Safety International Limited reserves the right to alter specifications and introduce improvements without prior notice.

## Order Information

| | Product Type | 1 | 2 | 3 | 4 |
|---|---|---|---|---|---|
| Part Number | KF | | | | |
| Example | KF | FS | B | 6,4 | 1 |

| 5 |
|---|
| ABC |

| | | |
|---|---|---|
| 1 | **Lock portion type** | FS (1) / Q (1) |
| 2 | **Material** | B = Brass / S = Stainless steel |
| 3 | **L Dimension (bolt length when retracted) in mm** | 0 / 6,4 / 12,7 / 19,1 / 25,4 |
| 4 | **Form** | 1 / 2 / 3 / 4 (2) |
| 5 | **Lock portion symbol** | FS (1) up to 3 characters / Q (1) up to 6 characters |

(1) **FS - Lock type**
Up to 3 characters

**Q - Lock type**
Up to 6 characters

(2) **Form** 1 2 3 4

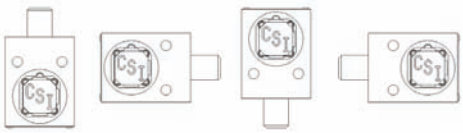

## Accessories

**Special construction available upon enquiry**

| | Product | Part number |
|---|---|---|
| | Flip Cap | FLIP-S |

## Contact Information

Castell Safety International Ltd.
The Castell Building
217 Kingsbury Road
London, England NW9 9PQ

t: +44 (0) 20 8200 1200
f: +44 (0) 20 8905 9378
e: uksales@castell.com

Castell Safety International Ltd.
Oskar-Jäger-Strasse 137
50825 Köln
Germany

t: +49 (0) 221 1649 794
f: +49 (0) 221 1649 795
e: vertrieb@castell.com

Castell Interlocks Inc.
Suite 800
150 N Michigan Avenue,
Chicago, Illinois 60601
USA

t: +1.312.360.1516
f: +1.312.268.5174
e: ussales@castell.com

Castell Safety China
Building 1, No. 123,
Lane 1165, Jindu Road,
Minhang District,
Shanghai 201108, China.

t: +86 21 61519023
f: +86 21 61519030
e: chinasales@castell.com

While every effort has been made to ensure the accuracy of the information provided, no liability can be taken for any errors or omission.
Castell Safety International Limited reserves the right to alter specifications and introduce improvements without prior notice.

# KL

# Dual Key Bolt Interlock

User Manual - Original Language Version

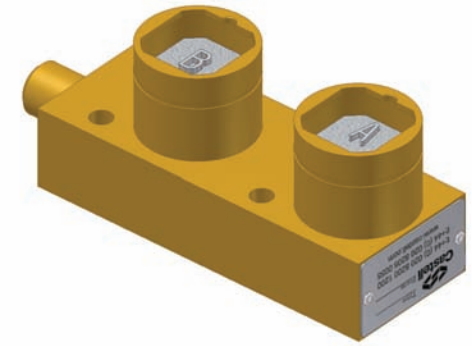

KL-FSB-6.4-4-D

The KL dual key bolt interlock is a key operated mechanical bolt interlock suitable for the control of electrical switchgear. The standard unit comes with a 15,88 mm diameter bolt of variable length, that is used to control the rotation or movement of operating handles or toggles of electrical switchgear. Many suppliers of switchgear equipment have mounting kits available for Castell's interlocks. The lock is manufactured in brass or stainless steel making it ideal for use in harsh or corrosive environments. The KL bolt interlock is available in a double key or exchange key condition.

## Operation

The Castell KL bolt interlock range is used on control of switchgear to inhibit movement of cams, toggles or levers.

### KL dual key bolt interlock, exchange key condition

1. **Key A is free, while key B is trapped and bolt is extended.**

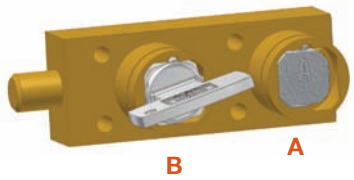


2. **Insert and turn key A, then turn key B to drive bolt, releasing key B.**

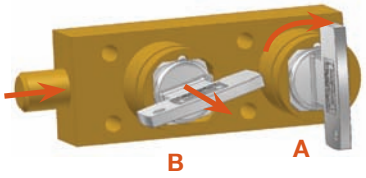


3. **Key B is free, key A is trapped and bolt is retracted.**

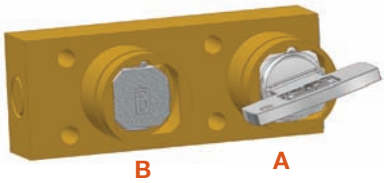


1. **While the side bolt is extended and key B is trapped, key A is free. The disconnector is locked by the extended bolt of the KL.**
2. **Inserting and turning key A in the bolt interlock enables rotation of key B, releasing the mechanism. This will trap key A into the lock.**
3. **Key A stays trapped while the bolt is retracted and key B is released.**

### KL dual key bolt interlock, double key condition

1. **Key A and key B are free, bolt is extended.**

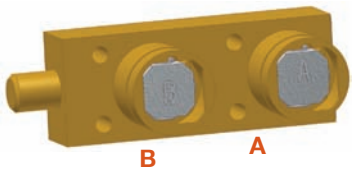


2. **Insert and turn both keys to drive bolt.**

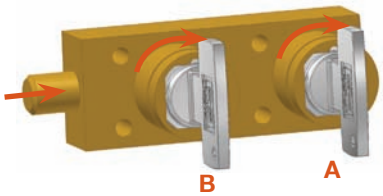


3. **Keys are trapped, bolt is retracted.**

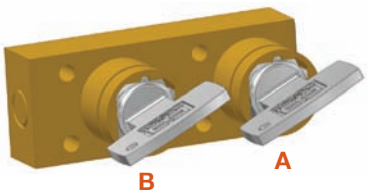


1. **While the side bolt is extended, key A and key B are free. The disconnector is locked.**
2. **By inserting and turning key A and key B in the bolt interlock, you can retract the bolt, releasing the disconnector. This will trap both keys into the lock.**
3. **Both keys stay trapped while the bolt is retracted.**

The length of the bolt can be varied to suit the application but travel of the bolt is always 19,05 mm. The key is free when the bolt is extended. Insertion and rotation clockwise of the key will retract the bolt. The key will be trapped in bolt retracted position.

While every effort has been made to ensure the accuracy of the information provided, no liability can be taken for any errors or omission.
Castell Safety International Limited reserves the right to alter specifications and introduce improvements without prior notice.

## Usage

The KL dual key bolt interlock should be used as a part of a safety system to allow safe control of disconnect switches.

The KL bolt interlock is not designed for security purposes, such as safe or external access to a building.
The KL bolt interlock is not designed to interlock gates or doors. Please refer to the AIE access interlock.

No hazardous substances were used in the manufacture of this product. The product can be disposed of in standard waste.

## Installation

The housing of the KL bolt interlock should normally be mounted to a panel using suitable fasteners. Please refer to drawing on page 4 for more installation details.

IMPORTANT:
The interlock should be mounted using anti-tamper fasteners to prevent unauthorised removal.

The KL bolt interlock must be installed by a competent and qualified person who has read and understood these instructions. Please retain this document in your technical file.

Force required to shear lock bolt is 30KN for stainless steel and 19KN for brass interlocks.

## Maintenance

Periodic visual checks should be carried out by the site manager / safety officer.
Do not lubricate lock barrel with oil or grease, use CK Dry Powder Graphite if necessary.

In case of detected defects please contact your nearest Castell Support Department for further actions.
Please see Contact section for contact details.

While every effort has been made to ensure the accuracy of the information provided, no liability can be taken for any errors or omission.
Castell Safety International Limited reserves the right to alter specifications and introduce improvements without prior notice.

## Technical Data

| | |
|---|---|
| **Temperature rating** | Minimum: -40°C [-40°F] ice free for Q & FS-Type |
| | Maximum: 107°C [224,6°F] for Q-Type/140°C [284°F] for FS-Type |
| **Type of mounting** | Surface mount using suitable fasteners (please refer to drawing on page 4 for more details) |
| **Weight** | 1,4 kg |
| **Material** | Brass/Stainless steel |
| **MTTF Certification** | Available on request |

## Application

KL dual key bolt interlocks are used as a part of a safety system. A typical application is where the electrical and pneumatic supplies to the machine are switched on and the access doors to the hazardous area are locked closed.

Key A and B are trapped in the KL bolt interlock, preventing acces to the machine area. To enter the area, the pneumatic supply must be turned off. Turning the keys in the KL bolt interlock will extend its bolt.
The released keys ensure the bolt remains in extended position locking off the disconnector.
The released keys can now be taken to the machine area to gain acces via the AI acces interlocks.

The disconenctor cannot be switched on until both access doors are locked closed and both keys replaced in the KL bolt interlock.

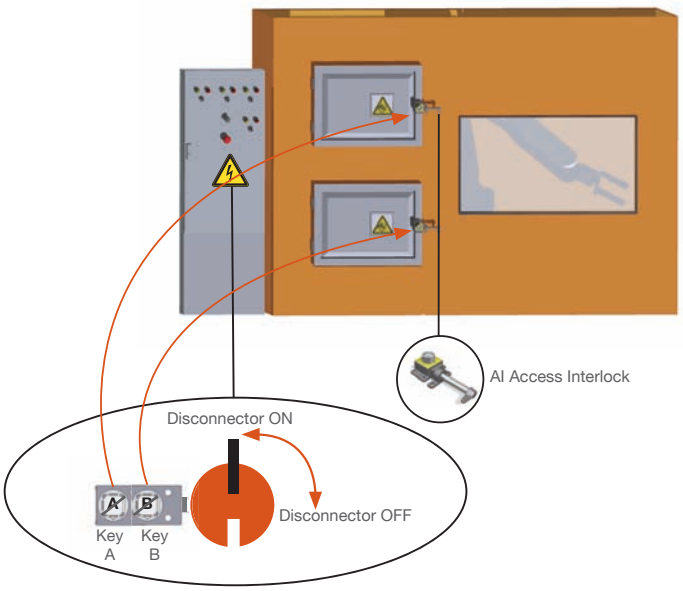


## EC-Declaration

We, the manufacturers, declare that the components, detailed herein and placed on the market, comply with all the essential health and safety requirements applying to them.

Empowered signatory:

Mr T.C. Whelan
Managing Director

While every effort has been made to ensure the accuracy of the information provided, no liability can be taken for any errors or omission.
Castell Safety International Limited reserves the right to alter specifications and introduce improvements without prior notice.

## Drawing

Dimensions:
**in mm**

***Note:*** *For safe mounting, use security screws*

KL, form 4

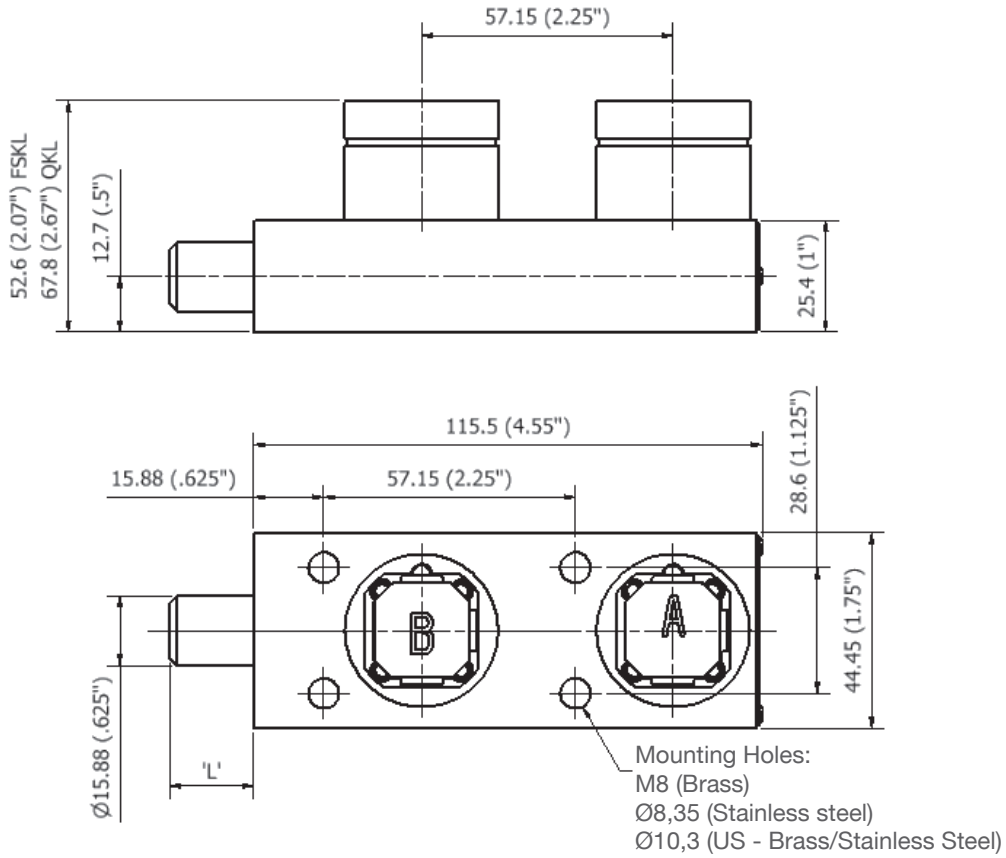


| **L Dimension Retracted bolt length (in mm)** | Extended bolt length (in mm) |
|---|---|
| **0** | 19,05 |
| **6,35** | 25,40 |
| **12,70** | 31,75 |
| **19,05** | 38,10 |
| **25,40** | 44,45 |

While every effort has been made to ensure the accuracy of the information provided, no liability can be taken for any errors or omission.
Castell Safety International Limited reserves the right to alter specifications and introduce improvements without prior notice.

## Order Information

| | Product Type | 1 | 2 | 3 | 4 | 5 | 6 |
|---|---|---|---|---|---|---|---|
| Part Number | KL | | | | | | |
| Example | KL | FS | B | 1S | 6,4 | 1 | D |

7 — A1 **Isolation Key Symbol** (exchange key condition) / OR / **Primary Key Symbol** (double key condition)

8 — B1 **Personnel Key Symbol** (exchange key condition) / OR / **Secondary Key Symbol** (double key condition)

| | | |
|---|---|---|
| 1 | **Lock portion type** | FS (1) / Q (1) |
| 2 | **Material** | B = Brass / S = Stainless steel |
| 3 | **Number of lock portions** | 1S = 1 secondary key (2 locks)<br>2S = 2 secondary keys (3 locks)<br>3S = 3 secondary keys (4 locks) |
| 4 | **L Dimension (bolt length when retracted) in mm** | 0 / 6,4 / 12,7 / 19,1 / 25,4 |
| 5 | **Form** | 1 / 2 / 3 / 4 (2) |
| 6 | **Key Condition** | D = double key condition / E = exchange key condition (see operation details, page 1) |
| 7 | **Lock portion symbol:**<br>Isolation key (for exchange key condition) **or**<br>Primary key (for double key condition) | FS (1) up to 3 characters / Q (1) up to 6 characters |
| 8 | **Lock portion symbol:**<br>Personnel key(s) (for exchange key condition) **or**<br>Secondary key(s) (for double key condition) | FS (1) up to 3 characters / Q (1) up to 6 characters |

(1) **FS - Lock type** Up to 3 symbols

**Q - Lock type** Up to 6 symbols

(2) **Form**

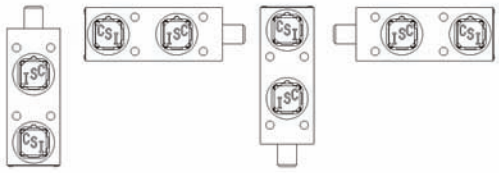


## Contact Information

Castell Safety International Ltd.
The Castell Building
217 Kingsbury Road
London, England NW9 9PQ

t: +44 (0) 20 8200 1200
f: +44 (0) 20 8905 9378
e: uksales@castell.com

Castell Safety International Ltd.
Oskar-Jäger-Strasse 137
50825 Köln
Germany

t: +49 (0) 221 1649 794
f: +49 (0) 221 1649 795
e: vertrieb@castell.com

Castell Interlocks Inc.
Suite 800
150 N Michigan Avenue,
Chicago, Illinois 60601
USA

t: +1.312.360.1516
f: +1.312.268.5174
e: ussales@castell.com

Castell Safety China
Building 1, No. 123,
Lane 1165, Jindu Road,
Minhang District,
Shanghai 201108, China.

t: +86 21 61519023
f: +86 21 61519030
e: chinasales@castell.com

While every effort has been made to ensure the accuracy of the information provided, no liability can be taken for any errors or omission.
Castell Safety International Limited reserves the right to alter specifications and introduce improvements without prior notice.

# KLC

# Dual Key Claw Interlock

User Manual - Original Language Version

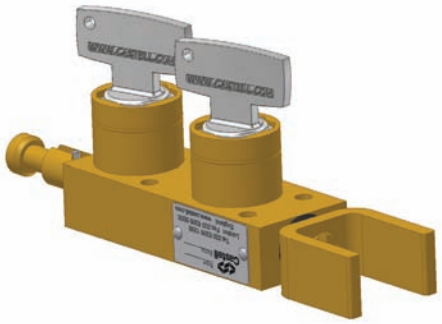

KLC-FSB (Form 4)

The KLC dual key claw interlock is a multi-key operated mechanical bolt interlock suitable for the control of electrical switchgear. The standard unit comes with a 16mm diameter bolt fitted with a claw that is used to control the rotation or movement of operating handles or toggles of electrical switchgear. The lock is manufactured in brass or stainless steel which is ideally suited to use in harsh or corrosive environments.

## Operation

The Castell claw interlocks range is used in switchgear control to lock off power supply and control accesses to hazardous areas.

### KLC dual key claw interlock, exchange key condition

1. **Key A is free, key B is trapped and claw is retracted.**

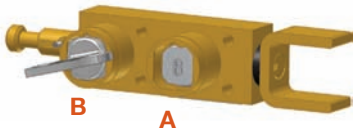


2. **Insert and turn key A and drive the bolt manually to extend the claw. Turn and release key B.**

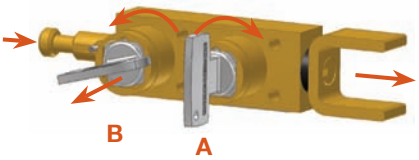


3. **Key B is free, key A is trapped and the claw is locked in extended position.**

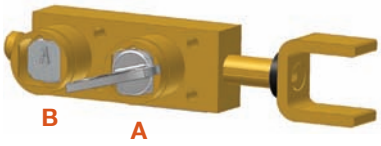


1. **While key A is free, the claw is locked in retracted position, allowing the switch to turn or move.**
2. **By inserting and turning key A in the KLC claw interlock, you can unlock the claw and manually extend the bolt. The claw now constrains the switch in the off position. Releasing key B will lock the claw in the extended position and trap key A. The released key B can be used as personnel key to gain access to the hazardous area via an access interlock.**
3. **The switch cannot be switched on until key B is replaced in the KLC claw interlock, the bolt is retracted and key A released locking the claw in the retracted position.**

The length of the bolt can be varied to suit the application but travel of the bolt is always 50,08 mm.

While every effort has been made to ensure the accuracy of the information provided, no liability can be taken for any errors or omission.
Castell Safety International Limited reserves the right to alter specifications and introduce improvements without prior notice.

## Operation

### KLC dual key claw interlock, double key condition

1. **Keys A and B are trapped, the claw is retracted**

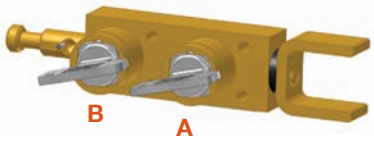


2. **Drive the bolt to extend the claw. Turn and release key A and B to lock the claw in extended position.**

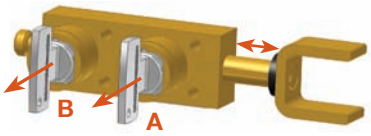


3. **Both keys are released and the claw is locked in extended position.**

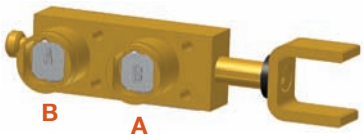


1. **While both keys are trapped, the claw is locked in retracted position, unconstraining the switch.**
2. **Driving the bolt, the claw is extended. Turning and releasing both keys will lock the claw in extended position constraining the switch in the off position. The released keys can be used as personnel keys to gain access to the hazardous area via an access interlock.**
3. **The switch cannot be switched on until key A and B are replaced in the KLC claw interlock and the claw is retracted.**

The length of the bolt can be varied to suit the application but travel of the bolt is always 50,08 mm.

While every effort has been made to ensure the accuracy of the information provided, no liability can be taken for any errors or omission.
Castell Safety International Limited reserves the right to alter specifications and introduce improvements without prior notice.

## Usage

The KLC dual key claw interlock is designed to be part of a safety system and is used to lock off switches which then allows to gain access to a hazardous area.

The KLC claw interlock is not designed for security purposes, such as external access to a building.

No hazardous substances were used in the manufacture of this product. The product can be disposed of in standard waste.

## Installation

The housing of the KLC dual key claw interlock should normally be mounted to a panel using suitable fasteners (please refer to drawing on page 4 for more details)

IMPORTANT:
The interlock should be mounted using anti-tamper fasteners to prevent unauthorised removal.

The KLC claw interlock must be installed by a competent and qualified person who has read and understood these instructions. Please retain this document in your technical file.

## Maintenance

Periodic visual checks should be carried out by the site manager / safety officer.
Do not lubricate lock barrel with oil or grease, use CK Dry Powder Graphite if necessary.

In case of defects beeing detected please contact your nearest Castell Support Department for further actions.
Please see Contact section for contact details.

While every effort has been made to ensure the accuracy of the information provided, no liability can be taken for any errors or omission.
Castell Safety International Limited reserves the right to alter specifications and introduce improvements without prior notice.

## Technical Data

| | |
|---|---|
| **Temperature rating** | Minimum: -40°C [-40°F] ice free for Q & FS Type |
| | Maximum: 107°C [224,6°F] for Q Type/140°C [284°F] for FS Type |
| **Type of mounting** | surface mount using suitable fasteners (please refer to drawing on page 4 for more details) |
| **Weight** | N/A |
| **Material** | Brass/Stainless steel |
| **MTTF Certification** | Available on request |

## Application

The Castell KLC claw interlock is used as apart of a safety system, typically in machine guarding applications. It is usually used in combination with an Access Interlock such as the Salus for part body access or an Access Interlock with an exchange key for full body access control.

While the power supply is switched on, both keys are trapped in the KLC claw interlock. To lock off the power supply switch, drive the bolt to extended position. The design has to be such that the bolt cannot be extended when the system is turned on. This will release the keys keeping the bolt extended and the switch locked off. The released keys are taken by the personnel to unlock the AI access interlocks on the HV cabinet. While the access doors are opened, the keys remain trapped in the AI locks.

The bolt of the KLC claw interlock cannot be retracted to unlock the power supply until both doors to the HV cabinet are locked, keys removed from AI access interlocks and the replaced into the KLC claw interlock.

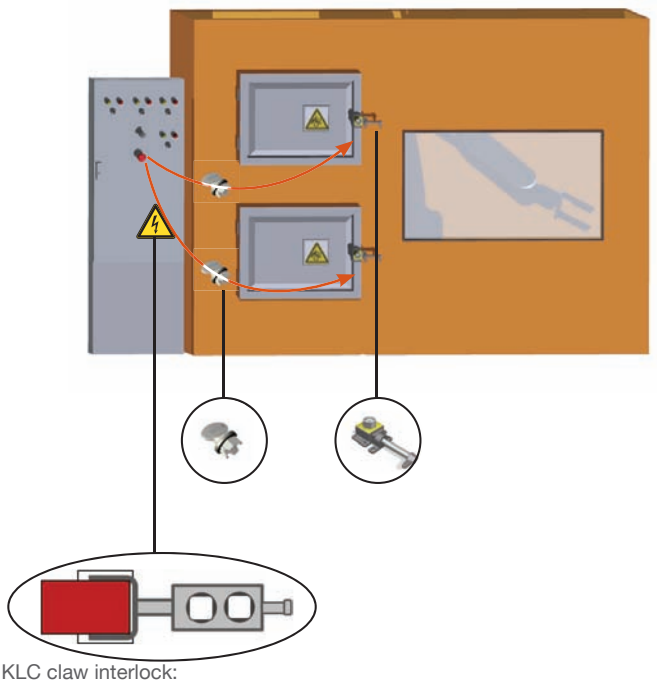

KLC claw interlock:
Switch locked OFF, key released

## EC-Declaration

We, the manufacturers, declare that the components, detailed herein and placed on the market, comply with all the essential health and safety requirements applying to them.

Empowered signatory:

Mr T.C. Whelan
Managing Director

While every effort has been made to ensure the accuracy of the information provided, no liability can be taken for any errors or omission.
Castell Safety International Limited reserves the right to alter specifications and introduce improvements without prior notice.

## Drawing

Dimensions:
**in mm**

***Note:*** *For safe mounting, use security screws*

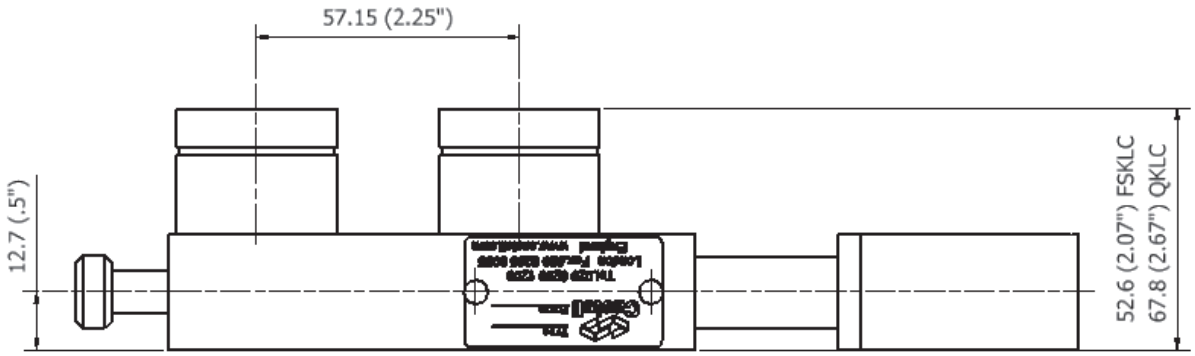


'A' = 57mm to 127mm
'B' = Specify
'D' = Specify

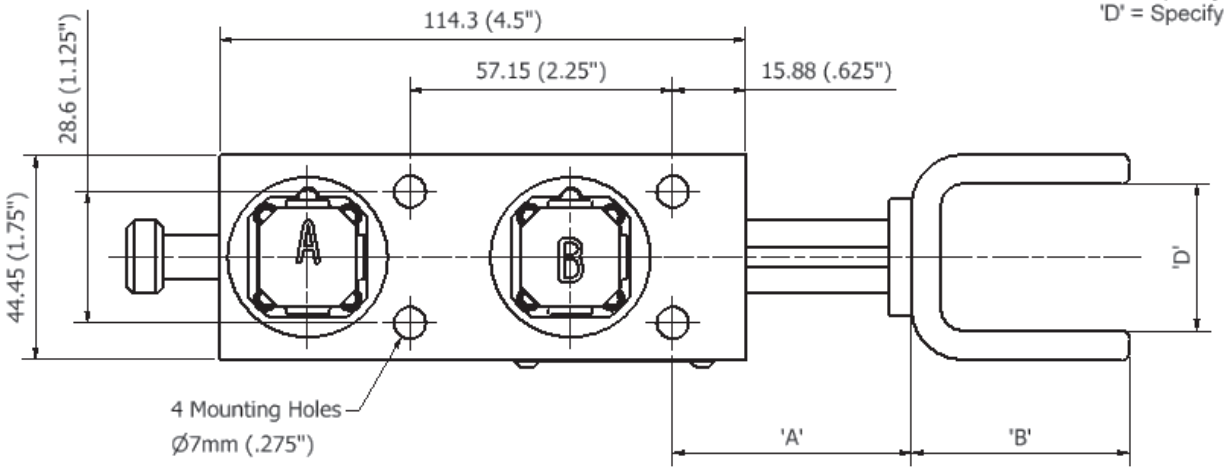


While every effort has been made to ensure the accuracy of the information provided, no liability can be taken for any errors or omission.
Castell Safety International Limited reserves the right to alter specifications and introduce improvements without prior notice.

## Order Information

| | Product Type | 1 | 2 | 3 |
|---|---|---|---|---|
| Part Number | KLC | - | | - | |
| Example | KLC | - FS | B | - 4 |

**4**
19.1mm

**5**
60mm

**6**
28.9mm

**7**
A — **Isolation Key Symbol** (exchange key condition)
OR
**Primary Key Symbol** (double key condition)

**8**
B — **Personnel Key Symbol** (exchange key condition)
OR
**Secondary Key Symbol** (double key condition)

| | | |
|---|---|---|
| 1 | **Lock portion type** | FS (1) / Q (1) |
| 2 | **Material** | B = Brass / S = Stainless steel |
| 3 | **Form** | 1 / 2 / 3 / 4 (2) |
| 4 | **A dimension (bolt travel)** | please specify: from 57mm to 127mm |
| 5 | **B dimension (see page 4 for claw details)** | please specify |
| 6 | **D dimension (see page 4 for claw details)** | please specify |
| 7 | **Lock portion symbol:**<br>Isolation key (for exchange key condition)<br>Primary key (for double key condition, located next to the bolt) | FS (1) up to 3 characters / Q (1) up to 6 characters |
| 8 | **Lock portion symbol:**<br>Personnel key (for exchange key condition)<br>Secondary key (for double key condition - this key drives the bolt) | FS (1) up to 3 characters / Q (1) up to 6 characters |

(1) **FS - Lock type** Up to 3 characters **Q - Lock type** Up to 6 characters

(2) **Form**

**1** **2** **3** **4**

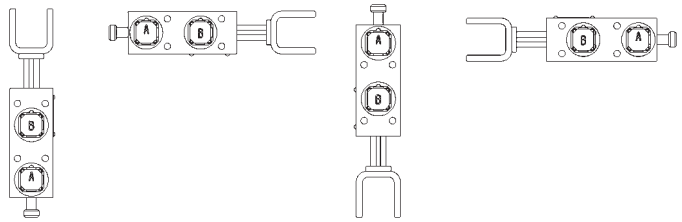


**Special construction available upon enquiry**

## Contact Information

Castell Safety International Ltd.
The Castell Building
217 Kingsbury Road
London, England NW9 9PQ

t: +44 (0) 20 8200 1200
f: +44 (0) 20 8905 9378
e: uksales@castell.com

Castell Safety International Ltd.
Oskar-Jäger-Strasse 137
50825 Köln
Germany

t: +49 (0) 221 1649 794
f: +49 (0) 221 1649 795
e: vertrieb@castell.com

Castell Interlocks Inc.
Suite 800
150 N Michigan Avenue,
Chicago, Illinois 60601
USA

t: +1.312.360.1516
f: +1.312.268.5174
e: ussales@castell.com

Castell Safety China
Building 1, No. 123,
Lane 1165, Jindu Road,
Minhang District,
Shanghai 201108, China.

t: +86 21 61519023
f: +86 21 61519030
e: chinasales@castell.com

While every effort has been made to ensure the accuracy of the information provided, no liability can be taken for any errors or omission.
Castell Safety International Limited reserves the right to alter specifications and introduce improvements without prior notice.

# KLE

## Sliding Door Interlock

User Manual - Original Language Version

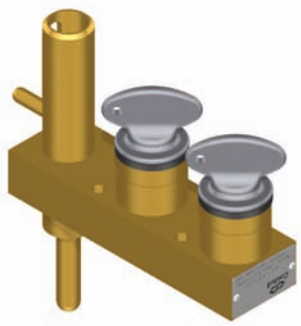

KLE-QB-6.4-4

The KLE double key sliding door interlock is a one piece access interlock comprising of a main body and sliding bolt. The lock is designed to suit sliding doors of various sizes and thicknesses. The interlock is manufactured in brass and comes with the brass F (Figure) or Q style lock portions and is ideal for use in dry, non-corrosive environments where the lock is subject to medium to heavy use. Typical industries using the KLE lock are automotive and steel production. The KLE door interlock is available in a double key or exchange key condition.

## Operation

The Castell KLE sliding door interlock range is used in machine guarding applications control accesss to hazardous areas.

### KLE bolt interlock, exchange key condition

1. **Key A is free, while key B is trapped and bolt is extended.**

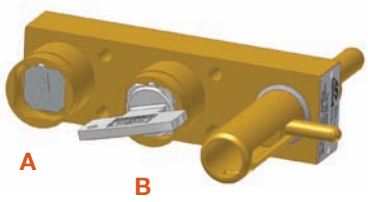


2. **Insert and turn key A and then retract the bolt. Turn and release key B.**

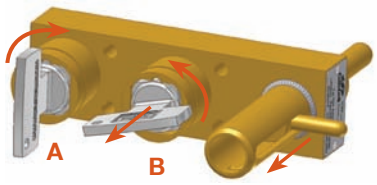


3. **Key B is free, key A is trapped and bolt is retracted.**

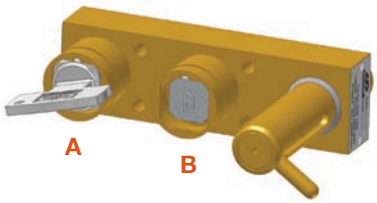


1. **While the side bolt is extended and key B is trapped, key A is free. The door is locked closed.**
2. **Inserting and turning key A in the bolt interlock enables you to rotate key B, releasing the mechanism. This will trap key A into the lock. Key be can now be B is taken by the personnel to the machnine area.**
3. **Key A stays trapped until the door is open and key B returned to the KLE sliding door interlock.**

### KLE bolt interlock, double key condition

1. **Key A and key B are free, bolt is extended.**

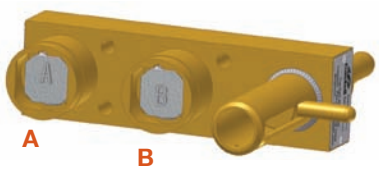


2. **Insert and turn both keys and then retract the bolt .**

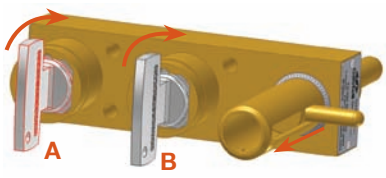


3. **Both keys are trapped, bolt is retracted.**

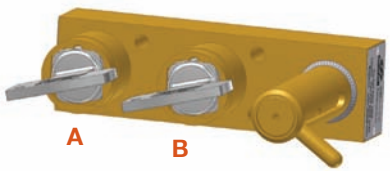


1. **While the side bolt is extended, key A and B are free. The door is locked closed.**
2. **Inserting and turning the keys will allow the bolt to retract. The door can now be unlocked.**
3. **The keys stay trapped as long the door is opened and bolt is retracted.**

The length of the bolt can be varied to suit the application but travel of the bolt is always 50,08 mm.

While every effort has been made to ensure the accuracy of the information provided, no liability can be taken for any errors or omission.
Castell Safety International Limited reserves the right to alter specifications and introduce improvements without prior notice.

## Usage

The KLE sliding door lock should be used to allow safe control of sliding doors.

The KLE lock is not designed for security purposes, such as a safe or external access to a building.

No hazardous substances were used in the manufacture of this product. The product can be disposed of in standard waste.

## Installation

The housing of the KLE sliding door lock should normally be mounted to a panel using suitable fasteners (please refer to drawing on page 4 for more details).

IMPORTANT:
The interlock should be mounted using anti-tamper fasteners to prevent unauthorised removal.

The KLE sliding door lock must be installed by a competent and qualified person who has read and understood these instructions. Please retain this document in your technical file.

Force required to shear lock bolt is 19KN.

## Maintenance

Periodic visual checks should be carried out by the site manager / safety officer.
Do not lubricate lock barrel with oil or grease, use CKLE Dry Powder Graphite if necessary.

In case of defects beeing detected please contact your nearest Castell Support Department for further actions.
Please see Contact section for contact details.

While every effort has been made to ensure the accuracy of the information provided, no liability can be taken for any errors or omission.
Castell Safety International Limited reserves the right to alter specifications and introduce improvements without prior notice.

## Technical Data

| | |
|---|---|
| **Temperature rating** | Minimum: -40°C [-40°F] ice free for Q & FS Type |
| | Maximum: 107°C [224,6°F] for Q Type/140°C [284°F] for FS Type |
| **Type of mounting** | Surface mount using suitable fasteners (please refer to drawing on page 4 for more details) |
| **Weight** | Brass: 0,7 kg |
| **Material** | Brass |
| **MTTF Certification** | Available on request |

## Application

The KLE bolt interlocks are used as apart of a safety system, typically in machine guarding applications.

The power supply to the system is switched on and the access door to the hazardous area is locked closed.

The removal of the isolation key in the KS20 unit, isolates the electrical suppliy to the LV Panel. The key is then used to unlock the KLE sliding door interlock on the sliding door. This will release the second key (key B), which can be taken by personnel into the machine area.

The power cannot be switched on until key B is returned to the access interlock, the door is closed, the bolt and key B are trapped in the KLE unit and key A returned to the KS20.

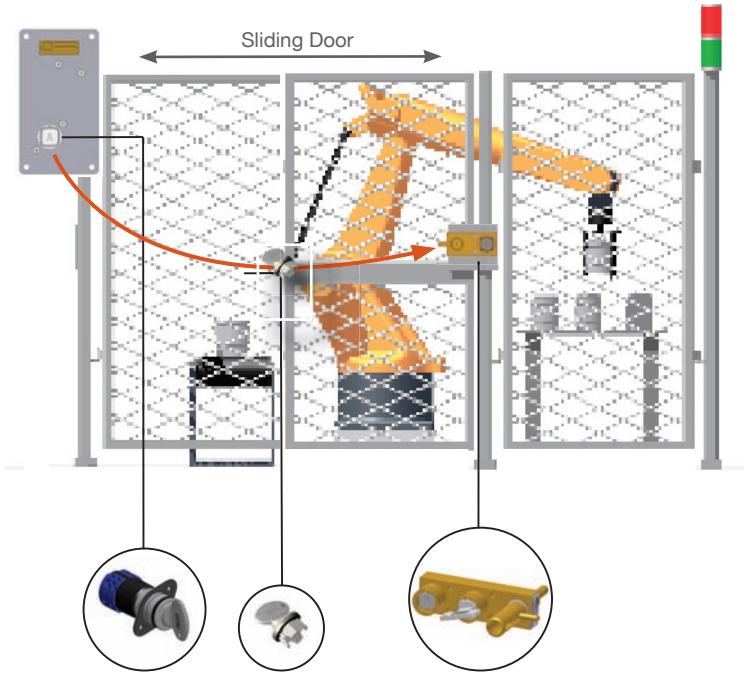


## EC-Declaration

We, the manufacturers, declare that the components, detailed herein and placed on the market, comply with all the essential health and safety requirements applying to them.

Empowered signatory:

Mr T.C. Whelan
Managing Director

While every effort has been made to ensure the accuracy of the information provided, no liability can be taken for any errors or omission.
Castell Safety International Limited reserves the right to alter specifications and introduce improvements without prior notice.

## Drawing

Dimensions:
**in mm**

***Note:*** *For safe mounting, use security screws*

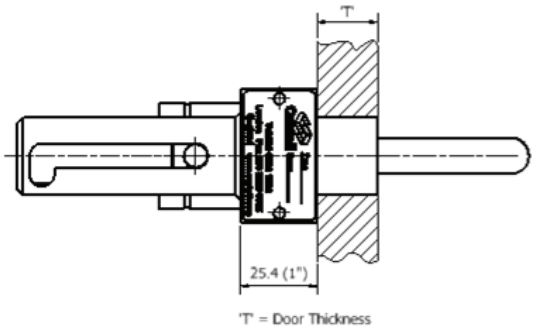


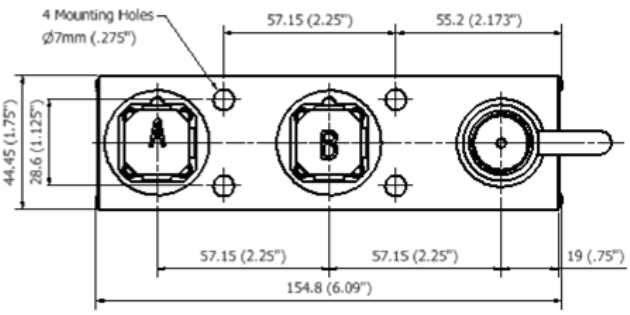


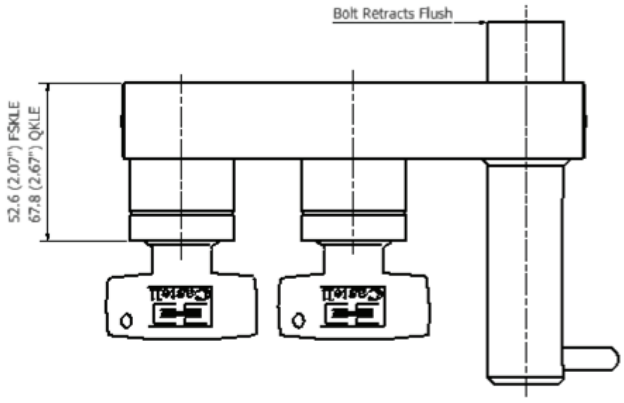


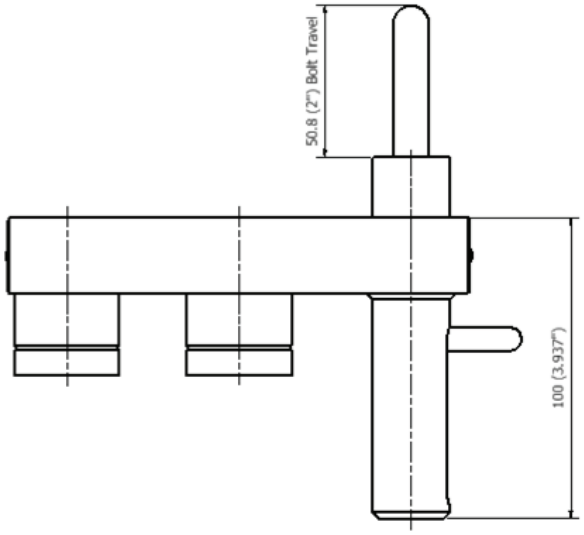


While every effort has been made to ensure the accuracy of the information provided, no liability can be taken for any errors or omission.
Castell Safety International Limited reserves the right to alter specifications and introduce improvements without prior notice.

## Order Information

| | Product Type | 1 | 2 | 3 | 4 | 5 | 6 |
|---|---|---|---|---|---|---|---|
| Part Number | KLE | | | | | | |
| Example | KLE | FS | B | 1 | E | 50,8 | 4 |

7: 9mm

8: A — **Isolation Key Symbol** (exchange key condition) / OR / **Primary Key Symbol** (double key condition)

9: B — **Personnel Key Symbol** (exchange key condition) / OR / **Secondary Key Symbol** (double key condition)

| | | |
|---|---|---|
| 1 | **Lock portion type** | FS (1) / Q (1) |
| 2 | **Material** | B = Brass (standard) |
| 3 | **Number of secondary lock portions** | 1 (standard) |
| 4 | **Key condition** | E = Exchange key condition /<br>D = Double key condition (simulataneous removal of all keys) |
| 5 | **Bolt length** | 50,8 mm (standard) |
| 6 | **Form** | 1 / 2 / 3 / 4 (2) |
| 7 | **Door thinckness** | please advise |
| 8 | **Lock portion symbol:**<br>Isolation key (for exchange key condition)<br>Primary key (for double key condition, located next to the bolt) | FS (1) up to 3 characters / Q (1) up to 6 characters |
| 9 | **Lock portion symbol:**<br>Personnel key (for exchange key condition)<br>Secondary key (for double key condition) | FS (1) up to 3 characters / Q (1) up to 6 characters |

(1) **FS - lock type**
Up to 3 symbols

**Q - lock type**
Up to 6 symbols

(2) **Form** 1 2 3 4

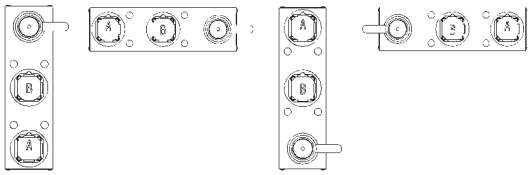

## Contact Information

**Special construction available upon enquiry**

Castell Safety International Ltd.
The Castell Building
217 KLEingsbury Road
London, England NW9 9PQ

t: +44 (0) 20 8200 1200
f: +44 (0) 20 8905 9378
e: uksales@castell.com

Castell Safety International Ltd.
Oskar-Jäger-Strasse 137
50825 KLEöln
Germany

t: +49 (0) 221 1649 794
f: +49 (0) 221 1649 795
e: vertrieb@castell.com

Castell Interlocks Inc.
Suite 800
150 N Michigan Avenue,
Chicago, Illinois 60601
USA

t: +1.312.360.1516
f: +1.312.268.5174
e: ussales@castell.com

Castell Safety China
Building 1, No. 123,
Lane 1165, Jindu Road,
Minhang District,
Shanghai 201108, China.

t: +86 21 61519023
f: +86 21 61519030
e: chinasales@castell.com

While every effort has been made to ensure the accuracy of the information provided, no liability can be taken for any errors or omission.
Castell Safety International Limited reserves the right to alter specifications and introduce improvements without prior notice.

# KLF

# Dual Key Bolt Interlock with Flange

User Manual - Original Language Version

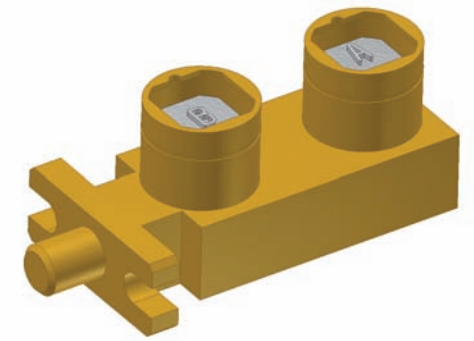

KLF-FSB-0-4-D

The KLF Lock is a multi-key operated mechanical bolt interlock for the control of electrical switchgear. The standard unit comes with a 16 mm diameter bolt of variable length, that is used to control the rotation or movement of operating handles or toggles of electrical switchgear. The KLF bolt interlock comes equipped with a flange to allow for different sorts of mounting. This lock is manufactured in brass or stainless steel making it ideal for use in harsh or corrosive environments. The KLF bolt interlock is available in a double key or exchange key condition.

## Operation

The Castell KLF bolt interlock range is used on control of switchgear to inhibit movement of cams, toggles or levers.

### KLF dual key bolt interlock, exchange key condition

1. **Key A is free, while key B is trapped and bolt is extended.**

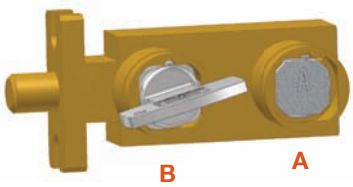


2. **Insert and turn key A, then turn key B to drive bolt, releasing key B.**

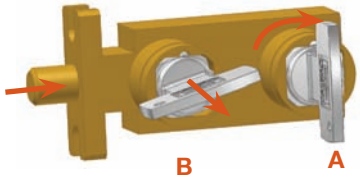


3. **Key B is free, key A is trapped and bolt is retracted.**

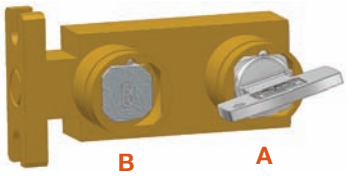


1. **While the side bolt is extended and key B is trapped, key A is free. The disconnector is locked by the extended bolt of the KLF.**
2. **Inserting and turning key A in the bolt interlock enables rotation of key B, releasing the mechanism. This will trap key A into the lock.**
3. **Key A stays trapped while the bolt is retracted and key B is released.**

### KLF dual key bolt interlock, double key condition

1. **Key A and key B are free, bolt is extended.**

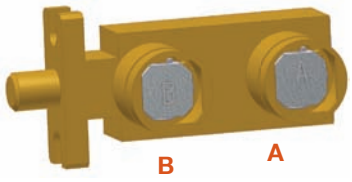


2. **Insert and turn both keys to drive bolt.**

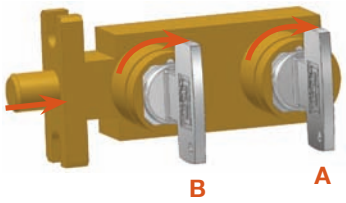


3. **Keys are trapped, bolt is retracted.**

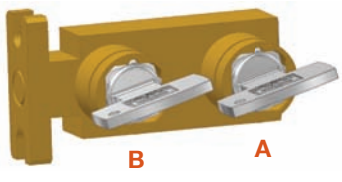


1. **While the side bolt is extended, key A and key B are free. The disconnector is locked.**
2. **By inserting and turning key A and key B in the bolt interlock, the bolt can be retracted, releasing the disconnector. This will trap both keys into the lock.**
3. **Both keys stay trapped while the bolt is retracted.**

The length of the bolt can be varied to suit the application but travel of the bolt is always 19,05 mm. The key is free when the bolt is extended. Insertion and rotation clockwise of the key will retract the bolt. The key will be trapped in bolt retracted position.

While every effort has been made to ensure the accuracy of the information provided, no liability can be taken for any errors or omission.
Castell Safety International Limited reserves the right to alter specifications and introduce improvements without prior notice.

## Usage

The KLF dual key bolt interlock should be used as a part of a safety system to allow safe control of disconnect switches.

The KLF bolt interlock is not designed for security purposes, such as a safe or external access to a building.
The KLF bolt interlock is not designed to interlock gates or doors. Please refer to the AIE access interlock.

No hazardous substances were used in the manufacture of this product. The product can be disposed of in standard waste.

## Installation

The housing of the KLF bolt interlock should normally be mounted to a panel using suitable fasteners. Please refer to drawing on page 4 for more installation details.

IMPORTANT:
The interlock should be mounted using anti-tamper fasteners to prevent unauthorised removal.

The KLF bolt interlock must be installed by a competent and qualified person who has read and understood these instructions. Please retain this document in your technical file.

Force required to shear lock bolt is 30KN for stainless steel and 19KN for brass interlocks.

## Maintenance

Periodic visual checks should be carried out by the site manager / safety officer.
Do not lubricate lock barrel with oil or grease, use CK Dry Powder Graphite if necessary.

In case of detected defects please contact your nearest Castell Support Department for further actions.
Please see Contact section for contact details.

While every effort has been made to ensure the accuracy of the information provided, no liability can be taken for any errors or omission.
Castell Safety International Limited reserves the right to alter specifications and introduce improvements without prior notice.

## Technical Data

| | |
|---|---|
| **Temperature rating** | Minimum: -40°C [-40°F] ice free for Q & FS-Type |
| | Maximum: 107°C [224,6°F] for Q-Type/140°C [284°F] for FS-Type |
| **Type of mounting** | Surface mount using suitable fasteners (please refer to drawing on page 4 for more details) |
| **Weight** | 1,4 kg |
| **Material** | Brass/Stainless steel |
| **MTTF Certification** | Available on request |

## Application

KLF dual key bolt interlocks are used as a part of a safety system. A typical application is where the electrical and pneumatic supplies to the machine are switched on and the access doors to the hazardous area are locked closed.

Key A and B are trapped in the KLF bolt interlock, preventing acces to the machine area. To enter the area, the pneumatic supply must be turned off. Turning the keys in the KLF bolt interlock will extend its bolt. The released keys ensure the bolt remains in extended position locking off the disconnector.
The released keys can now be taken to the machine area to gain acces via the AI acces interlocks.

The disconenctor cannot be switched on until both access doors are locked closed and both keys replaced in the KLF bolt interlock.

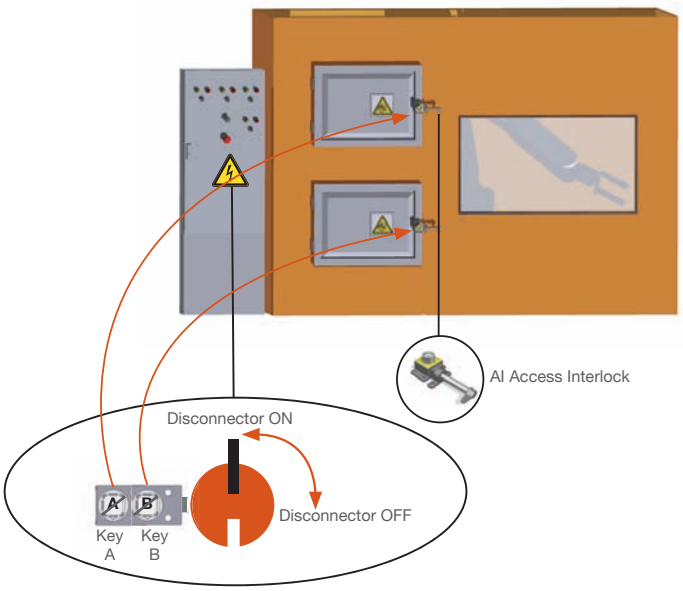


## EC-Declaration

We, the manufacturers, declare that the components, detailed herein and placed on the market, comply with all the essential health and safety requirements applying to them.

Empowered signatory:

Mr T.C. Whelan
Managing Director

While every effort has been made to ensure the accuracy of the information provided, no liability can be taken for any errors or omission.
Castell Safety International Limited reserves the right to alter specifications and introduce improvements without prior notice.

## Drawing

Dimensions:
**in mm**

***Note:*** *For safe mounting, use security screws*

KLF, form 4

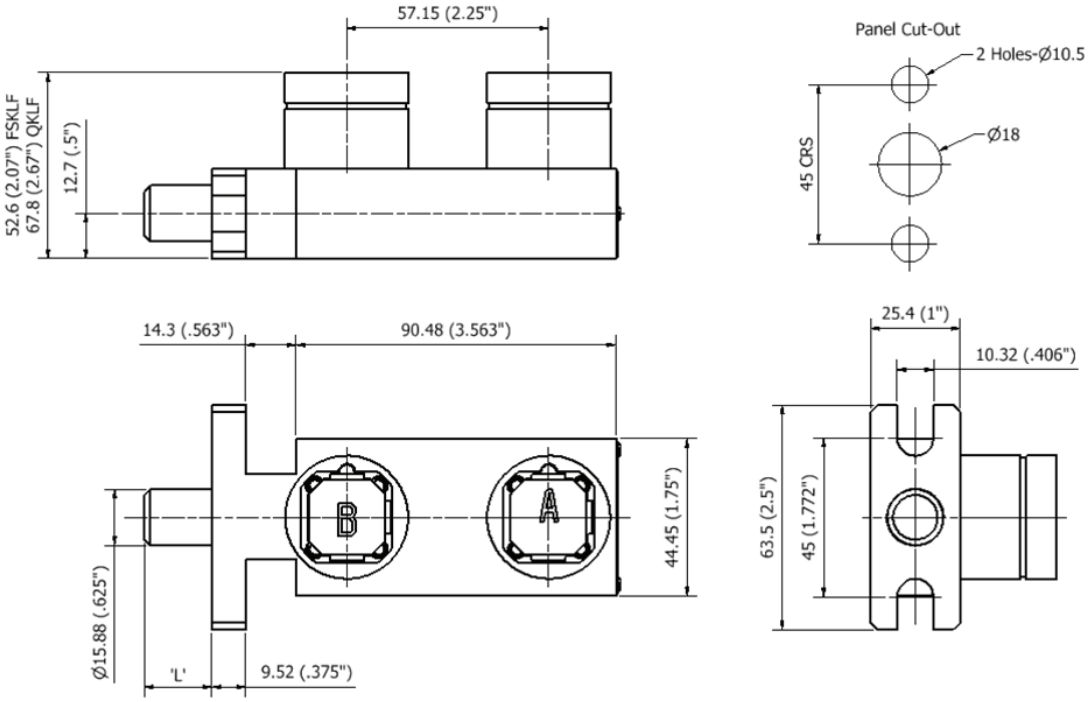


Mounting Holes:
M8 (Brass)
Ø8,35 (Stainless steel)
Ø10,3 (US - Brass/Stainless Steel)

| **L Dimension Retracted bolt length (in mm)** | Extended bolt length (in mm) |
|---|---|
| **0** | 19,05 |
| **6,35** | 25,40 |
| **12,70** | 31,75 |
| **19,05** | 38,10 |
| **25,40** | 44,45 |

While every effort has been made to ensure the accuracy of the information provided, no liability can be taken for any errors or omission.
Castell Safety International Limited reserves the right to alter specifications and introduce improvements without prior notice.

## Order Information

| | Product Type | 1 | 2 | 3 | 4 | 5 | 6 |
|---|---|---|---|---|---|---|---|
| Part Number | KLF | | | | | | |
| Example | KLF | FS | B | 1S | 6,4 | 1 | D |

7 — A1 **Isolation Key Symbol** (exchange key condition) / OR / **Primary Key Symbol** (double key condition)

8 — B1 **Personnel Key Symbol** (exchange key condition) / OR / **Secondary Key Symbol** (double key condition)

| | | |
|---|---|---|
| 1 | **Lock portion type** | FS (1) / Q (1) |
| 2 | **Material** | B = Brass / S = Stainless steel |
| 3 | **Number of lock portions** | 1S = 1 secondary key (2 locks)<br>2S = 2 secondary keys (3 locks)<br>3S = 3 secondary keys (4 locks) |
| 4 | **L Dimension (bolt length when retracted) in mm** | 0 / 6,4 / 12,7 / 19,1 / 25,4 |
| 5 | **Form** | 1 / 2 / 3 / 4 (2) |
| 6 | **Key Condition** | D = double key condition / E = exchange key condition (see operation details, page 1) |
| 7 | **Lock portion symbol:**<br>Isolation key (for exchange key condition) **or**<br>Primary key (for double key condition) | FS (1) up to 3 characters / Q (1) up to 6 characters |
| 8 | **Lock portion symbol:**<br>Personnel key(s) (for exchange key condition) **or**<br>Secondary key(s) (for double key condition) | FS (1) up to 3 characters / Q (1) up to 6 characters |

(1) **FS - Lock type** Up to 3 symbols

**Q - Lock type** Up to 6 symbols

(2) **Form**

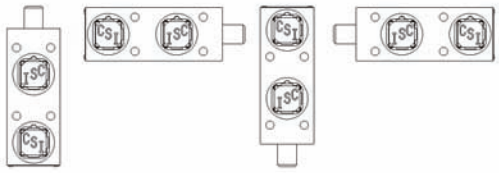


## Contact Information

Castell Safety International Ltd.
The Castell Building
217 Kingsbury Road
London, England NW9 9PQ

t: +44 (0) 20 8200 1200
f: +44 (0) 20 8905 9378
e: uksales@castell.com

Castell Safety International Ltd.
Oskar-Jäger-Strasse 137
50825 Köln
Germany

t: +49 (0) 221 1649 794
f: +49 (0) 221 1649 795
e: vertrieb@castell.com

Castell Interlocks Inc.
Suite 800
150 N Michigan Avenue,
Chicago, Illinois 60601
USA

t: +1.312.360.1516
f: +1.312.268.5174
e: ussales@castell.com

Castell Safety China
Building 1, No. 123,
Lane 1165, Jindu Road,
Minhang District,
Shanghai 201108, China.

t: +86 21 61519023
f: +86 21 61519030
e: chinasales@castell.com

While every effort has been made to ensure the accuracy of the information provided, no liability can be taken for any errors or omission.
Castell Safety International Limited reserves the right to alter specifications and introduce improvements without prior notice.

# KLP

## Multi Key Bolt Interlock with Safety Switch

User Manual - Original Language Version

KLP2-FSB-1S-0-RE-4

The KLP bolt interlock is a key operated mechanical bolt interlock complete with position monitoring electrical contacts for the control of electrical switchgear or valves. The KLP lock comes with a 16 mm diameter bolt of variable length, that is used to control the rotation or movement of operating handles or toggles. The KLP1 comes with 2N/C 1N/O 10 amp contacts and the KLP2 has 4N/C 2N/O 10 amp contacts, these are used to provide remote indication of the bolt position or to switch the control circuitry on the machine. The locks are manufactured in brass or stainless steel making them ideally suited to use in harsh or corrosive environments.

## Operation

The Castell KLP bolt interlocks with safety switches are used in switchgear control to break circuitry and inhibit movement of cams, toggles or levers simulateously.

**KLP multi key bolt interlock with safety switch, rear entry, exchange key condition**

① **Key A is free, while key B is trapped and bolt is retracted.**

② **Insert and turn key A to extend the bolt. Release key B to trap key and change the contacts condition of the switch.**

③ **Key B is free, key A is trapped and bolt is extended. Switch contacts are reversed.**

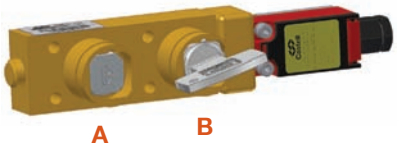


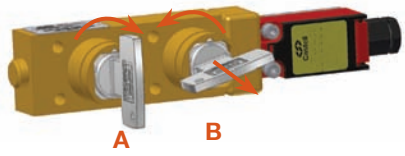


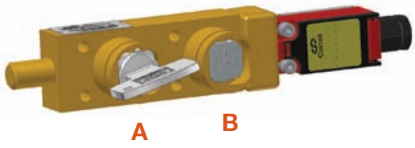


1. **While the side bolt is retracted, key B is trapped and key A is free.**
2. **Inserting and turning key A in the KLP bolt interlock drives the bolt to extended position and allows to turn and release key B. This changes the contacts condition in the KLP switch. The extended bolt locks the power disconnector in the OFF position. Key B can now be taken by personnel into machine area.**
3. **With key B released and key A trapped in the KLP, the bolt stays extended, ensuring the disconnector is in the safe condition.**

While every effort has been made to ensure the accuracy of the information provided, no liability can be taken for any errors or omission.
Castell Safety International Limited reserves the right to alter specifications and introduce improvements without prior notice.

## Operation

**KLP multi key bolt interlock with safety switch, rear entry, double key condition**

① **Key A and B are trapped, while the bolt is retracted.**

② **Turn and release both keys, to drive the bolt and change switch condition.**

③ **Both keys are free and bolt is extended. Switch contacts are reversed.**

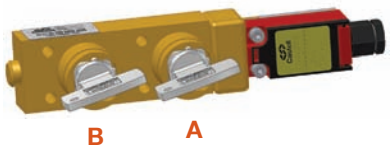


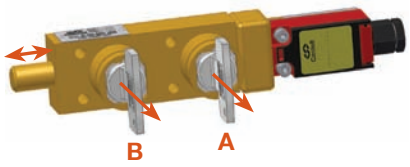


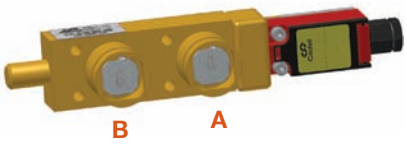


1. While the side bolt is retracted and key B is trapped, key A is free.
2. Turning and releasing key A in the KLP bolt interlock changes the contacts condition in the KLP switch and enables the rotation of key B to drive the bolt. The extended bolt locks the power disconnector in the OFF position. Both keys can now be taken by the personnel to the machine area.
3. With both keys released, the bolt stays extended, ensuring the disconnector is in the safe condition until both keys are inserted and turned KLP bolt interlock.

While every effort has been made to ensure the accuracy of the information provided, no liability can be taken for any errors or omission.
Castell Safety International Limited reserves the right to alter specifications and introduce improvements without prior notice.

## Usage

The KLP multi key bolt interlock with safety switch should be used to allow safe control of valves or disconnect switches.

The KLP multi key bolt interlock is not designed for security purposes, such as a safe or external access to a building.

## Installation

The housing of the KLP bolt interlock can be mounted either to a panel or on a surface using suitable fasteners. Please refer to drawing on page 4 for more details

IMPORTANT:
The interlock should be mounted using anti-tamper fasteners to prevent unauthorised removal.

The KLP bolt interlock must be installed by a competent and qualified person who has read and understood these instructions. Please retain this document in your technical file.

Force required to shear lock bolt is 30KN for stainless steel and 19KN for brass interlocks.

## Maintenance

Periodic visual checks should be carried out by the site manager / safety officer.
Do not lubricate lock barrel with oil or grease, use CK Dry Powder Graphite if necessary.

In case of defects beeing detected please contact your nearest Castell Support Department for further actions.
Please see Contact section for contact details.

While every effort has been made to ensure the accuracy of the information provided, no liability can be taken for any errors or omission.
Castell Safety International Limited reserves the right to alter specifications and introduce improvements without prior notice.

## Technical Data

| | |
|---|---|
| **Temperature rating** | -25°C ice free to +55°C |
| **Type of mounting** | panel or surface mount using suitable fasteners (please refer to drawing on page 4 for more details) |
| **Weight** | KP1: Front of board mount = 0,8 kg / back on board mount = 0,6 kg |
| | KP2: Front of board mount = 0,8 kg / back of board mount = 1 kg |
| **Material** | Brass/Stainless steel |
| **Switch approvals** | CE, CSA |
| **MTTF Certification** | Available on request |

## Application

Castell KLP bolt interlocks with safety switches are used as a part of a safety system, typically in switchgear applications.

The electrical supply of the machine is on, and the protective doors to the hazardous area are locked. Both keys are trapped in the KLP unit. Before entering the machine area the disconnector lever needs to be rotated to isolate the power to the machine. To lock the disconnector lever in the safe position both keys in the KLP bolt interlock need to be released. This extends the bolt of the KLP, locks it in the extended position and changes the contacts in the KLP switch. This is connected to a traffic light or another display, indicating the access to machnine area can be gained.

The removed keys are taken to the AI access interlocks to open the doors. The power supply cannot be switched back on while the keys are trapped in the access interlocks.

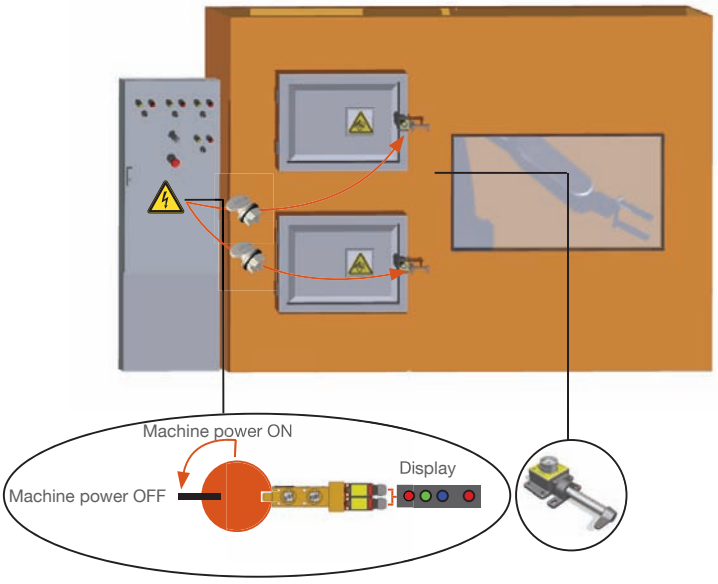


## EC-Declaration

We, the manufacturers, declare that the components, detailed herein and placed on the market, comply with all the essential health and safety requirements applying to them.

Empowered signatory:

Mr T.C. Whelan
Managing Director

While every effort has been made to ensure the accuracy of the information provided, no liability can be taken for any errors or omission.
Castell Safety International Limited reserves the right to alter specifications and introduce improvements without prior notice.

## Drawing

Dimensions:
**in mm**

***Note:*** *For safe mounting, use security screws*

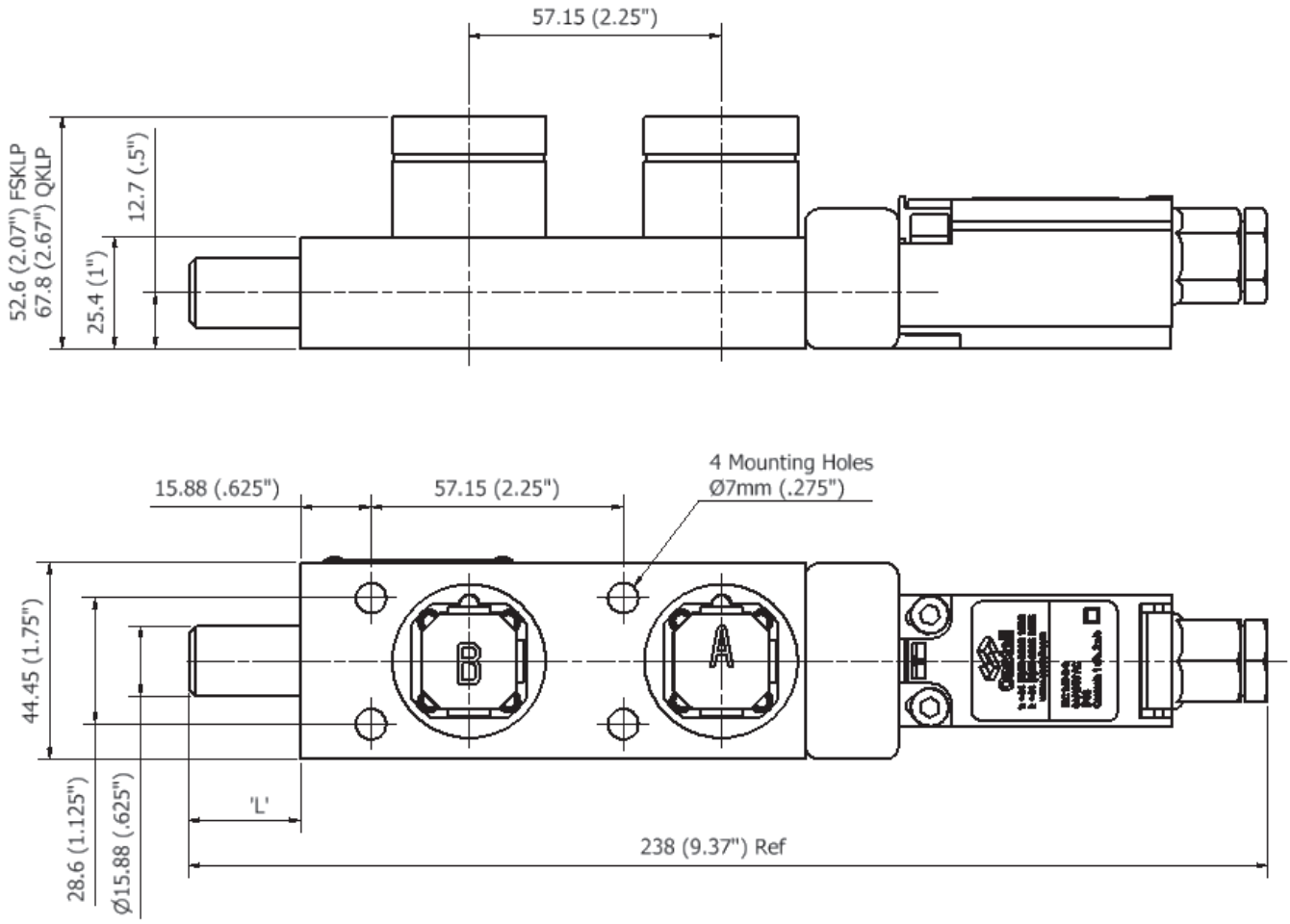


| **L Dimension Retracted bolt length (in mm)** | Extended bolt length (in mm) |
|---|---|
| **0** | 19,05 |
| **6,35** | 25,40 |
| **12,70** | 31,75 |
| **19,05** | 38,10 |
| **25,40** | 44,45 |

While every effort has been made to ensure the accuracy of the information provided, no liability can be taken for any errors or omission.
Castell Safety International Limited reserves the right to alter specifications and introduce improvements without prior notice.

## Wiring Diagram

Bolt retracted - switch on: 2 N/C - 1 N/O

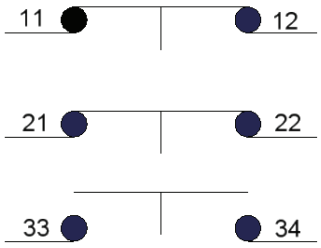


While every effort has been made to ensure the accuracy of the information provided, no liability can be taken for any errors or omission.
Castell Safety International Limited reserves the right to alter specifications and introduce improvements without prior notice.

## Order Information

| | Product Type | 1 | | 2 | 3 | 4 | 5 | 6 | 7 | 8 |
|---|---|---|---|---|---|---|---|---|---|---|
| Part Number | KLP | | - | | | - | | - | | - | | - | | - | |
| Example | KLP | 1 | - | Q | S | - | 1S | - | 19,1 | - | RE | - | 4 | - | E |

**7**
- A — **Isolation Key Symbol** (exchange key condition)
- OR
- **Primary Key Symbol** (double key condition)

**8**
- B — **Personnel Key Symbol** (exchange key condition)
- OR
- **Secondary Key Symbol** (double key condition)

| | | |
|---|---|---|
| **1** | **Switch specification** | 1 = 2NC/1NO (1 switch)<br>2 = 4NC/2NO (2 switches) |
| **2** | **Lock portion type** | FS (1) / Q (1) |
| **3** | **Material** | B = Brass / S = Stainless steel |
| **4** | **Secondary lock portion(s)**<br>Secondary lock portions are provided for personnel keys, primary lock posrtion for the isolation key | 1S / 2S / 3S / 4S / 5S or 6S = 1 / 2 / 3 / 4 / 5 or 6 secondary lock portions respectively |
| **6** | **L Dimension (bolt length when retracted) in mm** | 0 / 6,4 / 12,7 / 19,1 / 25,4 |
| **6** | **Switch entry** | RE = Rear entry / FR = Front entry |
| **7** | **Form** | 1 / 2 / 3 / 4 (2) |
| **8** | **Key condition** | E = Exchange key condition /<br>D = Double key condition (simulataneous removal of all keys) |
| **7** | **Lock portion symbol:**<br>Isolation key (for exchange key condition)<br>Primary key (for double key condition, located next to the bolt) | FS (1) up to 3 characters / Q (1) up to 6 characters |
| **8** | **Lock portion symbol:**<br>Personnel key (for exchange key condition)<br>Secondary key (for double key condition - this key drives the bolt) | FS (1) up to 3 characters / Q (1) up to 6 characters |

(1) **FS - Lock type** Up to 3 characters **Q - Lock type** Up to 6 characters

(2) **Form**

**1**

**2**

**3**

**4**

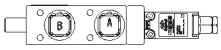

**Special construction available upon enquiry**

## Contact Information

Castell Safety International Ltd.
The Castell Building
217 Kingsbury Road
London, England NW9 9PQ

t: +44 (0) 20 8200 1200
f: +44 (0) 20 8905 9378
e: uksales@castell.com

Castell Safety International Ltd.
Oskar-Jäger-Strasse 137
50825 Köln
Germany

t: +49 (0) 221 1649 794
f: +49 (0) 221 1649 795
e: vertrieb@castell.com

Castell Interlocks Inc.
Suite 800
150 N Michigan Avenue,
Chicago, Illinois 60601
USA

t: +1.312.360.1516
f: +1.312.268.5174
e: ussales@castell.com

Castell Safety China
Building 1, No. 123,
Lane 1165, Jindu Road,
Minhang District,
Shanghai 201108, China.

t: +86 21 61519023
f: +86 21 61519030
e: chinasales@castell.com

While every effort has been made to ensure the accuracy of the information provided, no liability can be taken for any errors or omission.
Castell Safety International Limited reserves the right to alter specifications and introduce improvements without prior notice.

# KP

# Bolt Interlock with Safety Switch

User Manual - Original Language Version

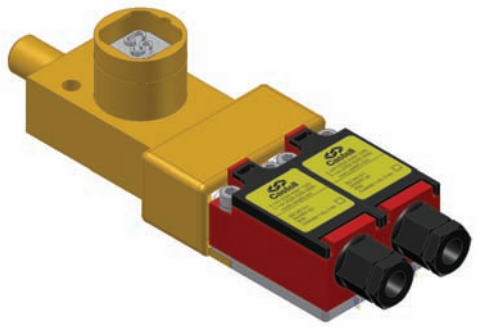

KP2-FSB-6.4-RE-4

The KP bolt interlock is a key operated mechanical bolt interlock complete with position monitoring electrical contacts for the control of electrical switchgear or valves. The KP lock comes with a 16 mm diameter bolt of variable length, that is used to control the rotation or movement of operating handles or toggles. The KP1 comes with 2N/C 1N/O 10 amp contacts and the KP2 has 4N/C 2N/O 10 amp contacts, these are used to provide remote indication of the bolt position or to switch the control circuitry on the machine. The locks are manufactured in brass or stainless steel making them ideally suited to use in harsh or corrosive environments.

## Operation

The Castell KP bolt interlocks with safety switches are used in switchgear control to break circuitry and inhibit movement of cams, toggles or levers simulateously.

**KP bolt interlock with safety switch, rear entry, form 4**

① **Key is trapped, bolt is retracted.**

② **Turn and release key to drive the bolt and change the switch contacts condition.**

③ **Key is free, bolt is extended, switch contacts are reversed.**

1. **While the power is on, the key is trapped the side bolt is retracted. The KP switch contacts are opened.**
2. **Turning the key drives the bolt to extended position, e.g. locking off the movement of a disconnector. Turning the key also changes the contacts in the KP switch, which is connected to a traffic light or other display. The display then indicates that the acces can be gained in the machine area. The released key can now be taken to open the door lock to the machine area.**
3. **The power disconnector cannot be unlocked until the key is replaced and turned in the KP bolt interlock.**

The KP bolt interlock is available as a KP1 or KP2 version with either one or two safety switches respectively. The KP bolt interlock is available with as rear or front entry mounted switch (panel or surface mount respectively).

The length of the bolt is available in various lengths to suit the application, but the travel of the bolt is always 19,05 mm. The key is trapped when the bolt is extended. Rotation of the key anti clockwise will retract the bolt and chnge contacts in the switch.

While every effort has been made to ensure the accuracy of the information provided, no liability can be taken for any errors or omission.
Castell Safety International Limited reserves the right to alter specifications and introduce improvements without prior notice.

## Usage

The KP bolt interlock with safety switch should be used to allow safe control of valves or disconnect switches.

The KP bolt interlock is not designed for security purposes, such as a safe or external access to a building.

## Installation

The housing of the KP Bolt Interlock can be mounted either to a panel or on a surface using suitable fasteners. Please refer to drawing on page 4 for more details

IMPORTANT:
The interlock should be mounted using anti-tamper fasteners to prevent unauthorised removal.

The KP bolt interlock must be installed by a competent and qualified person who has read and understood these instructions. Please retain this document in your technical file.

Force required to shear lock bolt is 30KN for stainless steel and 19KN for brass interlocks.

## Maintenance

Periodic visual checks should be carried out by the site manager / safety officer.
Do not lubricate lock barrel with oil or grease, use CK Dry Powder Graphite if necessary.

In case of defects beeing detected please contact your nearest Castell Support Department for further actions.
Please see Contact section for contact details.

While every effort has been made to ensure the accuracy of the information provided, no liability can be taken for any errors or omission.
Castell Safety International Limited reserves the right to alter specifications and introduce improvements without prior notice.

## Technical Data

| | |
|---|---|
| **Temperature rating** | -25°C ice free to +55 °C |
| **Type of mounting** | panel or surface mount using suitable fasteners (please refer to drawing on page 4 for more details) |
| **Weight** | KP1: Front of board mount = 0,8 kg / back on board mount = 0,6 kg |
| | KP2: Front of board mount = 0,8 kg / back of board mount = 1 kg |
| **Material** | Brass/Stainless steel |
| **Power isolation** | 10 amp |
| **Switch approvals** | CE, CCC |
| **MTTF Certification** | Available on request |

## Application

Castell KP bolt interlocks with safety switches are used as a part of a safety system, typically in switchgear applications.

The electrical supply of the machine is on, and the protective door to the hazardous area is locked. The key is trapped in the KP bolt interlock. Before entering the machine area the disconnector lever needs to be rotated to isolate the machine. To lock the disconnector lever in the safe position the key in the KP bolt interlock needs to be turned extending the bolt of the KP. Removing the key traps the bolt in the extended position. The operation of the KP also changes the contacts in the KP switch. This is connected to a traffic light or another display, indicating the access to machnine area can be gained.

The removed key is taken to the AI access interlock to open the door. The power supply cannot be switched back on while the key is trapped in the access interlock.

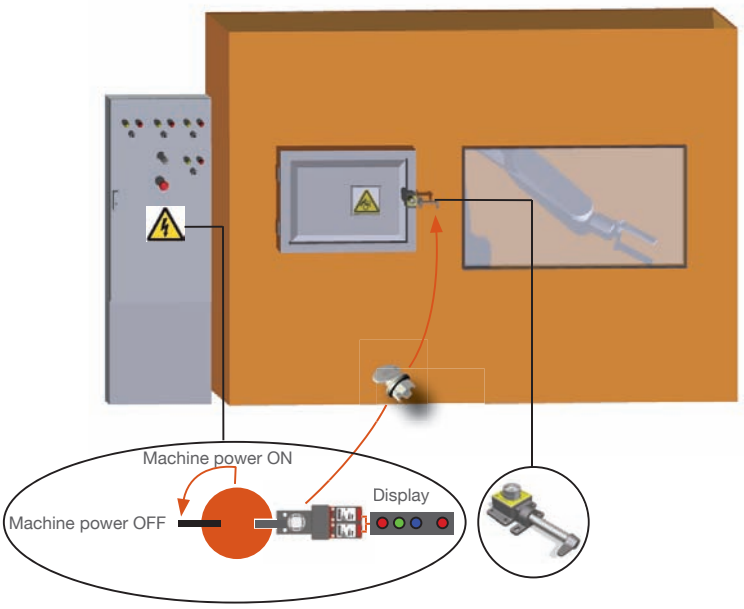


## EC-Declaration

We, the manufacturers, declare that the components, detailed herein and placed on the market, comply with all the essential health and safety requirements applying to them.

Empowered signatory:

Mr T.C. Whelan
Managing Director

While every effort has been made to ensure the accuracy of the information provided, no liability can be taken for any errors or omission.
Castell Safety International Limited reserves the right to alter specifications and introduce improvements without prior notice.

## Drawing

Dimensions:
**in mm**

***Note:*** *For safe mounting, use security screws*

KP1 (1 switch)

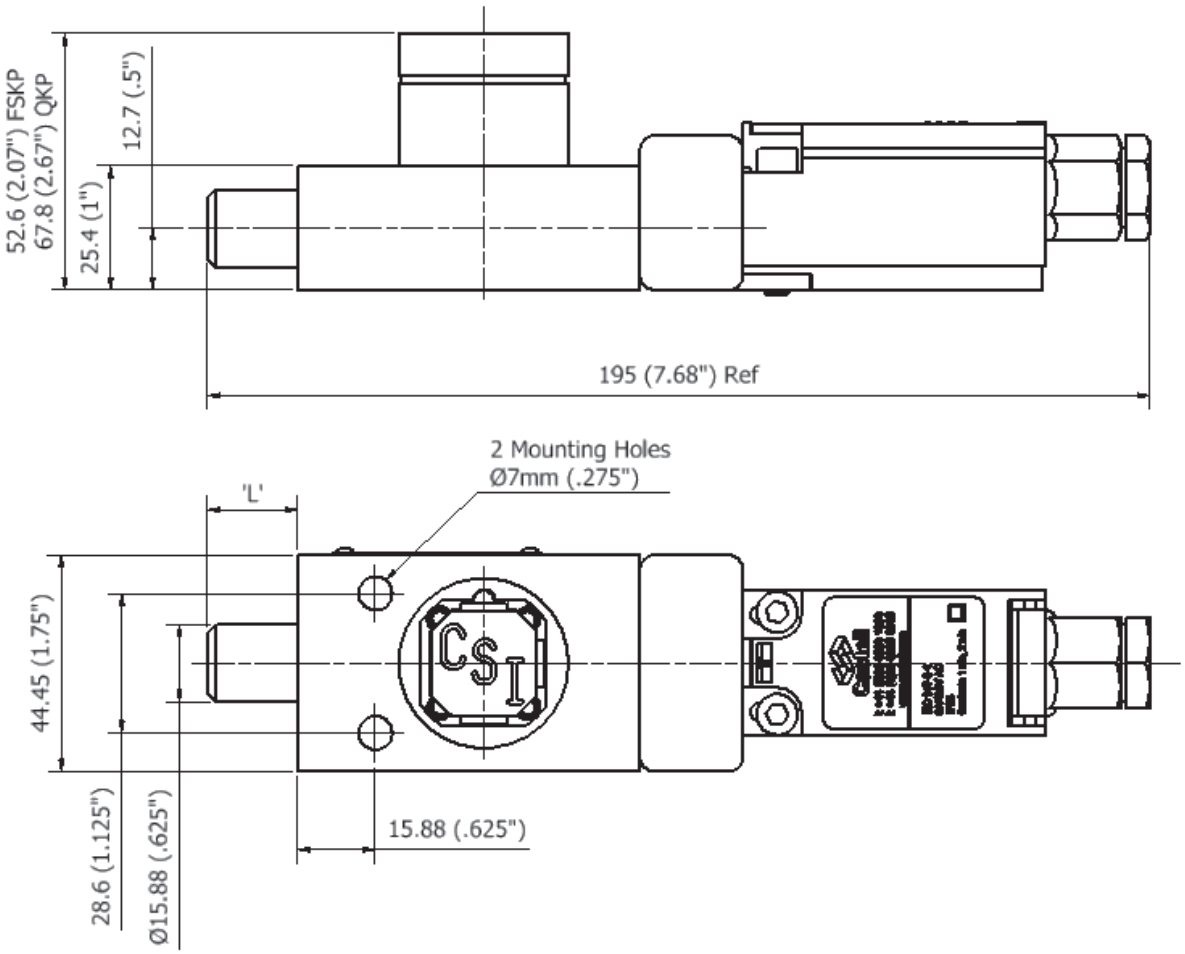


| L Dimension<br>Retracted bolt length (in mm) | Extended bolt length (in mm) |
|---|---|
| **0** | 19,05 |
| **6,35** | 25,40 |
| **12,70** | 31,75 |
| **19,05** | 38,10 |
| **25,40** | 44,45 |

While every effort has been made to ensure the accuracy of the information provided, no liability can be taken for any errors or omission.
Castell Safety International Limited reserves the right to alter specifications and introduce improvements without prior notice.

## Order Information

| | Product Type | 1 | | 2 | 3 | | 4 | | 5 | | 6 |
|---|---|---|---|---|---|---|---|---|---|---|---|
| Part Number | KP | | - | | | - | | - | | - | |
| Example | KP | 1 | - | FS | B | - | 0 | - | RE | - | 4 |

| 7 |
|---|
| ABC |

| | | |
|---|---|---|
| 1 | **Switch specification** | 1 = 2NC/1NO<br>2 = 4NC/2NO |
| 2 | **Lock portion type** | FS (1) / Q (1) |
| 3 | **Material** | B = Brass / S = Stainless steel |
| 4 | **L Dimension (bolt length when retracted) in mm** | 0 / 6,4 / 12,7 / 19,1 / 25,4 |
| 5 | **Switch entry** | RE = Rear entry / FR = Front entry |
| 6 | **Form** | 1 / 2 / 3 / 4 (2) |
| 7 | **Lock portion symbol** | FS (1) up to 3 characters / Q (1) up to 6 characters |

(1) **FS - Lock type** Up to 3 characters **Q - Lock type** Up to 6 characters

(2) **Form**

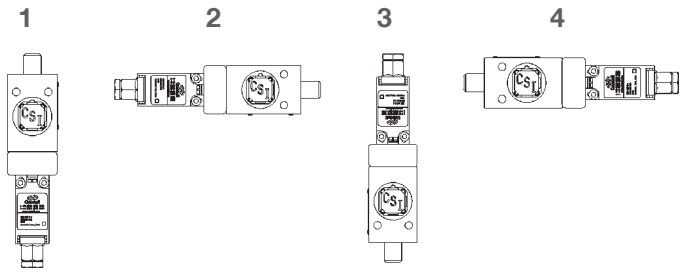


**Special construction available upon enquiry**

## Accessories

| | Product | Part number |
|---|---|---|
| | Flip Cap | FLIP-S |

## Contact Information

Castell Safety International Ltd.
The Castell Building
217 Kingsbury Road
London, England NW9 9PQ

t: +44 (0) 20 8200 1200
f: +44 (0) 20 8905 9378
e: uksales@castell.com

Castell Safety International Ltd.
Oskar-Jäger-Strasse 137
50825 Köln
Germany

t: +49 (0) 221 1649 794
f: +49 (0) 221 1649 795
e: eusales@castell.com

Castell Interlocks Inc.
Suite 800
150 N Michigan Avenue,
Chicago, Illinois 60601
USA

t: +1.312.360.1516
f: +1.312.268.5174
e: ussales@castell.com

Castell Safety China
Building 1, No. 123,
Lane 1165, Jindu Road,
Minhang District,
Shanghai 201108, China.

t: +86 21 61519023
f: +86 21 61519030
e: chinasales@castell.com

While every effort has been made to ensure the accuracy of the information provided, no liability can be taken for any errors or omission.
Castell Safety International Limited reserves the right to alter specifications and introduce improvements without prior notice.

# KS

# Powersafe Electrical Switch

User Manual - Original Language Version

KS20-FSS-P-C/O4

The KS is a key driven electrical switch designed for machine control circuits. This type of isolator should be used for short term, off load isolation. The KS is manufactured from either brass or stainless steel making it ideal for use in normal and harsh corrosive environments where the lock is subject to heavy use. The unit is able to be mounted into an existing panel or for surface mounting within its own polycarbonate IP65 rated enclosure.

## Operation

The Castell KS powersafe electrical key switch is used for machine isolation in order to protect the hazardous area from access while power is on.

**KS20 powersafe electrical switch, back on panel mount**

1. **Key is trapped, while power is on.**

2. **Turn and remove key to switch the power off by changing the contacts arrangement.**

3. **Key is free, power is off.**

1. **While the power is on and a machine is running, the key is trapped in the KS key switch.**
2. **By turning and removing the key out of the switch, the contacts condition in the KS changes, switching the power off.**
3. **The key now can be taken to open the door lock and gain acces to the machine area.**

The KS is available for different switching loads as KS20, KS32 or KS63 (20, 32 or 63 amps power isolation respectivly). Please refer to drawing on page 6 for more details.

The KS comes with 4 contacts as standard with contacts arrangements as 2NO/2NC, 4NC, but auxiliary set of contacts are available on request.

The KS is available as a back of panel mount version or as a front of panel mount with an enclosure. Please refer to drawing on page 6 for more details.

While every effort has been made to ensure the accuracy of the information provided, no liability can be taken for any errors or omission.
Castell Safety International Limited reserves the right to alter specifications and introduce improvements without prior notice.

## Usage

The KS powersafe electrical key switch is designed to be part of a safety system and is used to isolate the power releasing a key which is then used to gain access to a hazardous area via an access interlock such as the AI, AIE or Salus.

The KS key switch is not designed for security purposes.

No hazardous substances were used in the manufacture of this product. The product can be disposed of in standard waste.

## Installation

Front of panel units should be mounted to a flat surface using 4 off suitable fixing screws. Offer up back box of enclosure in desired position and use mounting holes as a drilling template.

Back of panel units should be mounted to a flat surface using suitable fasteners (please refer to drawing on page 4 for more details). The lock face should be sealed to the panel for ingress protection.

Cables should be connected to the switch (via the cable gland for front of panel) in accordance with the applicable wiring diagrams. Ensure that the unit is bonded for earth continuity (see drawing on page 4 for more installation details).

IMPORTANT:
The interlock should be mounted using anti-tamper fasteners to prevent unauthorised removal.

The KS range of switches must be installed by a competent and qualified person who has read and understood these instructions. Please retain this document in your technical file.

## Maintenance

Periodic visual checks should be carried out by the site manager / safety officer.
Do not lubricate lock barrel with oil or grease, use CK Dry Powder Graphite if necessary.

In case of defects beeing detected please contact your nearest Castell Support Department for further actions.
Please see Contact section for contact details.

While every effort has been made to ensure the accuracy of the information provided, no liability can be taken for any errors or omission.
Castell Safety International Limited reserves the right to alter specifications and introduce improvements without prior notice.

## Technical Data

| | |
|---|---|
| **Temperature rating** | -25 °C ice free to 55 °C |
| **Type of mounting** | Surface or panel mount using suitable fasteners (please refer to drawing on page 4 for more details) |
| **Weight** | KS20: Front of board mount = 0,8 kg / back on board mount = 0,6 kg |
| | KS32: Front of board mount = 0,8 kg / back of board mount = 1 kg |
| | KS63: 1,5 kg |
| **Material** | Brass/Stainless steel |
| **Enclosure** | Polycarbonate IP65 |
| **Power isolation** | 20A, 32A, and 63A options available |
| **Motor Isolation (AC Values)** | KS20: AC-23A 7.5kW or AC-3 5.5kW |
| | KS32: AC-23A 15kW or AC-3 11kW |
| | KS63: AC-23A 30kW or AC-3 18.5kW |
| **Switch approvals** | CE, CCC |
| **MTTF Certification** | Available on request |

## Application

A typical application of KS powersafe electrical switch is machine guarding. It is usually used in combination with an access interlock such as the Salus for part body access or an access interlock with an exchange key for full body access control such as AIE.

The KS breaks the machine safety circuit, ensuring a machine is shut down when the key is turned and removed. The key can then be taken to the Salus automativ access interlock to enable access to the machine.

The machine cannot be restarted until the door is closed, the bolt is trapped in the access interlock and the key is removed and taken to the KS key switch.

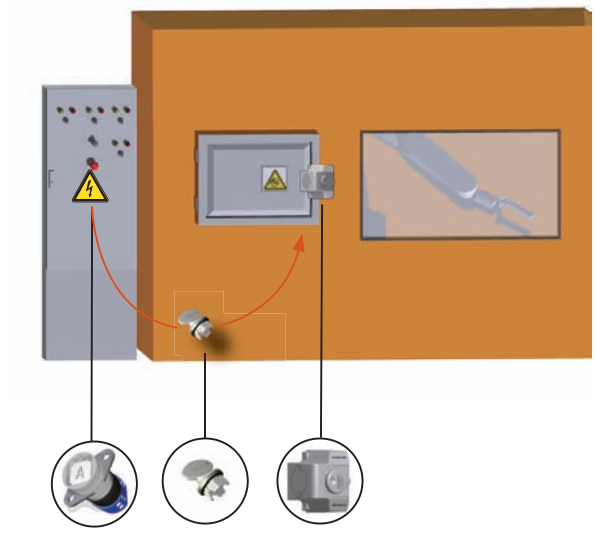

KS20 Key Switch  Salus Access Interlock

## EC-Declaration

We, the manufacturers, declare that the components, detailed herein and placed on the market, comply with all the essential health and safety requirements applying to them.

Empowered signatory:

Mr T.C. Whelan
Managing Director

While every effort has been made to ensure the accuracy of the information provided, no liability can be taken for any errors or omission.
Castell Safety International Limited reserves the right to alter specifications and introduce improvements without prior notice.

## Drawing

Dimensions:
**in mm**

***Note:*** *For safe mounting, use security screws*

KS20, FOB (Front of board, enclosure)

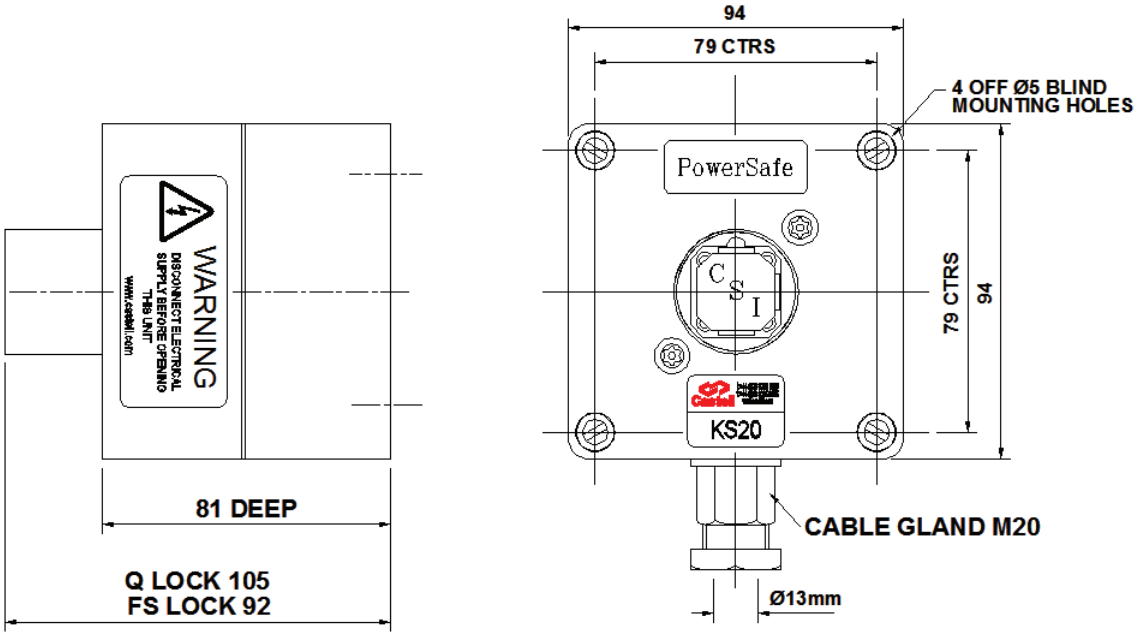


KS20, BOB (Back of board)

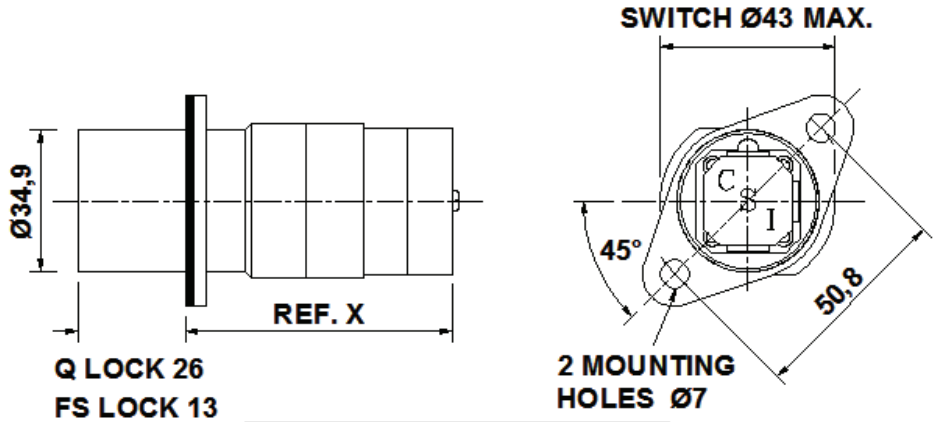


| DIMENSION REFERENCE 'X' | |
|---|---|
| No. OF POLES | LENGTH |
| 4 POLES | 66,6mm |
| 6 POLES | 76,1mm |
| 8 POLES | 85,6mm |
| 10 POLES | 95,1mm |
| 12 POLES | 104,6mm |

While every effort has been made to ensure the accuracy of the information provided, no liability can be taken for any errors or omission.
Castell Safety International Limited reserves the right to alter specifications and introduce improvements without prior notice.

## Wiring Diagram

Key Free, Switch off

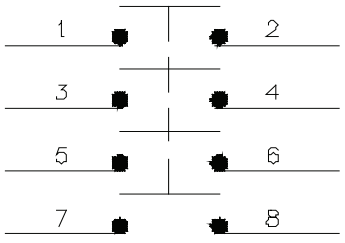


KEY FREE – SWITCH OFF

Key Free, 2 NO/2NC

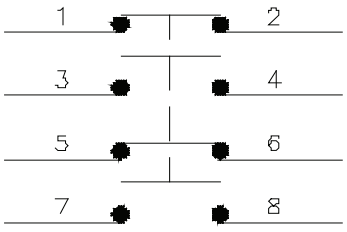


KEY FREE – 2 N/O & 2 N/C

While every effort has been made to ensure the accuracy of the information provided, no liability can be taken for any errors or omission.
Castell Safety International Limited reserves the right to alter specifications and introduce improvements without prior notice.

## Order Information

| | Product Type | 1 | | 2 | 3 | | 4 | | 5 | 6 |
|---|---|---|---|---|---|---|---|---|---|---|
| Part Number | KS | | - | | | - | | - | | |
| Example | KS | 20 | - | FS | B | - | P | - | C/O | 4 |

| 7 |
|---|
| ABC |

| | | |
|---|---|---|
| 1 | Isolation | 20 amps<br>32 amps<br>63 amps |
| 2 | Lock portion type | FS (1) / Q (1) |
| 3 | Material | B = Brass / S = Stainless steel |
| 4 | Mounting | P = Panel mount (back of board)<br>F = Front of board mount, with enclosure |
| 5 | Contacts arrangement in normal position | C/O = NO/NC arrangement (contacts closed/opened)<br>CC = NC arrangement (all contacts closed) |
| 6 | Contacts number | 4 (standard) |
| 7 | Lock portion symbol | FS (1) up to 3 characters / Q (1) up to 6 characters |

(1) **FS - Lock type** Up to 3 characters **Q - Lock type** Up to 6 characters

**Special construction available upon enquiry**

## Accessories

| | Product | Part number |
|---|---|---|
| | Flip Cap | FLIP-S |

## Contact Information

Castell Safety International Ltd.
The Castell Building
217 Kingsbury Road
London, England NW9 9PQ

t: +44 (0) 20 8200 1200
f: +44 (0) 20 8905 9378
e: uksales@castell.com

Castell Safety International Ltd.
Oskar-Jäger-Strasse 137
50825 Köln
Germany

t: +49 (0) 221 1649 794
f: +49 (0) 221 1649 795
e: vertrieb@castell.com

Castell Interlocks Inc.
Suite 800
150 N Michigan Avenue,
Chicago, Illinois 60601
USA

t: +1.312.360.1516
f: +1.312.268.5174
e: ussales@castell.com

Castell Safety China
Building 1, No. 123,
Lane 1165, Jindu Road,
Minhang District,
Shanghai 201108, China.

t: +86 21 61519023
f: +86 21 61519030
e: chinasales@castell.com

While every effort has been made to ensure the accuracy of the information provided, no liability can be taken for any errors or omission.
Castell Safety International Limited reserves the right to alter specifications and introduce improvements without prior notice.

# KSD

## Switch Disconnector

User Manual - Original Language Version

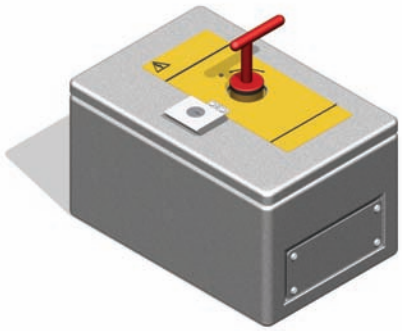

KSD32-FSS-F-CC4-C/O2

The KSD is a key driven switch disconnector for the isolation of currents. The standard KSD comes with 6 poles plus 2 auxiliary early break contacts. The KSD is manufactured from either brass or stainless steel making it suitable for use in standard or harsh corrosive environments. The unit is supplied suitable for mounting into an existing panel or for surface mounting within its own IP65 rated lockable mild steel enclosure.

## Operation

The Castell KSD Switch Disconenctor is typically used for machine isolation applications in order to protect the hazardous area from access while power is on.

### KSD Switch Disconnesctor

① **Key is trapped, power is on.**

② **To switch power off turn and release the key.**

③ **Key is released, power is off.**

1. **While the power is on and a machine is running, the key is trapped in the KSD Switch Disconnector.**
2. **To switch the power off turn and release the key from the KSD unit. This will alter the condition of the contacts within the switch, from closed to open.**
3. **The power is off until the is replaced in the KSD Switch Disconnector.**

The KSD is available for different switching loads as KSD32, KSD63, KSD125, KSD160, KSD250 or KSD315 (32, 63, 125, 160, 250 or 315 amps power isolation respectivly. Please refer to page 6 for more ordering details.

While every effort has been made to ensure the accuracy of the information provided, no liability can be taken for any errors or omission.
Castell Safety International Limited reserves the right to alter specifications and introduce improvements without prior notice.

## Usage

The KSD Switch Disconnector is designed to be part of a safety system and is used to isolate the power releasing a key which is then used to gain access to a hazardous area via an access interlock such as the AI, AIE or Salus.

The KSD Switch Disconnector is not designed for security purposes.

No hazardous substances were used in the manufacture of this product. The product can be disposed of in standard waste.

## Installation

The KSD unit should be mounted to a surface using suitable fasteners (please refer to drawing on page 4 for more details). The lock face should be sealed to the panel for ingress protection.

Cables should be connected to the switch in accordance with the applicable wiring diagrams. Ensure that the unit is bonded for earth continuity (please refer to drawing on page 4 for more installation details).

IMPORTANT:
The interlock should be mounted using anti-tamper fasteners to prevent unauthorised removal.

The KSD range of Switch Disconnectores must be installed by a competent and qualified person who has read and understood these instructions. Please retain this document in your technical file.

## Maintenance

Periodic visual checks should be carried out by the site manager / safety officer.
Do not lubricate lock barrel with oil or grease, use CK Dry Powder Graphite if necessary.

In case of defects beeing detected please contact your nearest Castell Support Department for further actions.
Please see Contact section for contact details.

While every effort has been made to ensure the accuracy of the information provided, no liability can be taken for any errors or omission.
Castell Safety International Limited reserves the right to alter specifications and introduce improvements without prior notice.

## Technical Data

| | |
|---|---|
| **Temperature Rating** | Minimum: -5°C [23°F] |
| | Maximum: 55°C [131°F] |
| **Type of mounting** | 3/8“ or M10 |
| **Weight** | KS32 = 4,5kg KS63 = 4,5kg KS125 = TBA KS160 = TBA KS250 = TBA KS315 = TBA |
| **Material** | Brass or Stainless steel, IP65 steel enclosure |
| **Power isolation** | 32A, 63A, 125A, 160A, 250A and 315A options available |
| **Motor Isolation (AC Values) / Switch polarity** | 32A: AC-23 at 400V = 15kW / available in 3P, 4P or 6P |
| | 63A: AC-23 at 400V = 30kW / available in 3P, 4P or 6P |
| | 125A: AC-23 at 400V = 55kW / available in 3P or 4P |
| | 160A: AC-23 at 400V = 75kW / available in 3P or 4P |
| **MTTF Certification** | Available on request |

## Application

The KSD is designed to operate as part of an integrated safety system, controlling access to hazardous areas.

Typical machinery using the KSD range are motor driven, high risk applications where complete isolation of the power supply is required before access is granted.

The removal of the key in the KSD changes the condition of the electrical supply to the machine to a safe condition. This key can be removed and used to unlock the door via AIE Access Interlock.

The guard can only be opened when the electrical supply has been switched into a safe condition.The machine cannot be restarted until the door is closed and the key is removed and taken to the KSD Switch Disconnector.

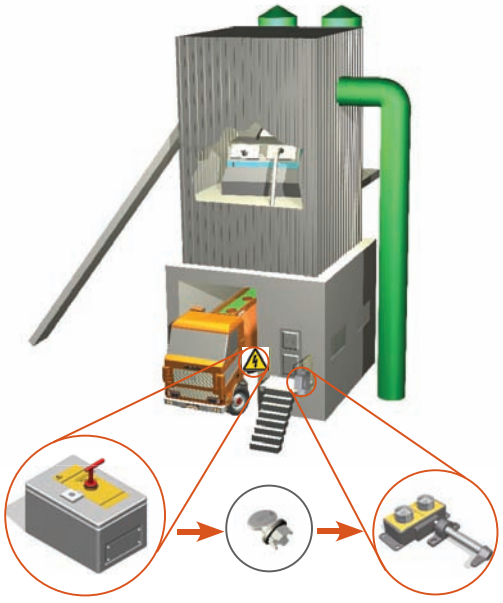

## EC-Declaration

We, the manufacturers, declare that the components, detailed herein and placed on the market, comply with all the essential health and safety requirements applying to them.

Empowered signatory:

Mr T.C. Whelan
Managing Director

While every effort has been made to ensure the accuracy of the information provided, no liability can be taken for any errors or omission.
Castell Safety International Limited reserves the right to alter specifications and introduce improvements without prior notice.

## Drawing

Dimensions:
**in mm**

***Note:*** *For safe mounting, use security screws*

KSD - surface mount

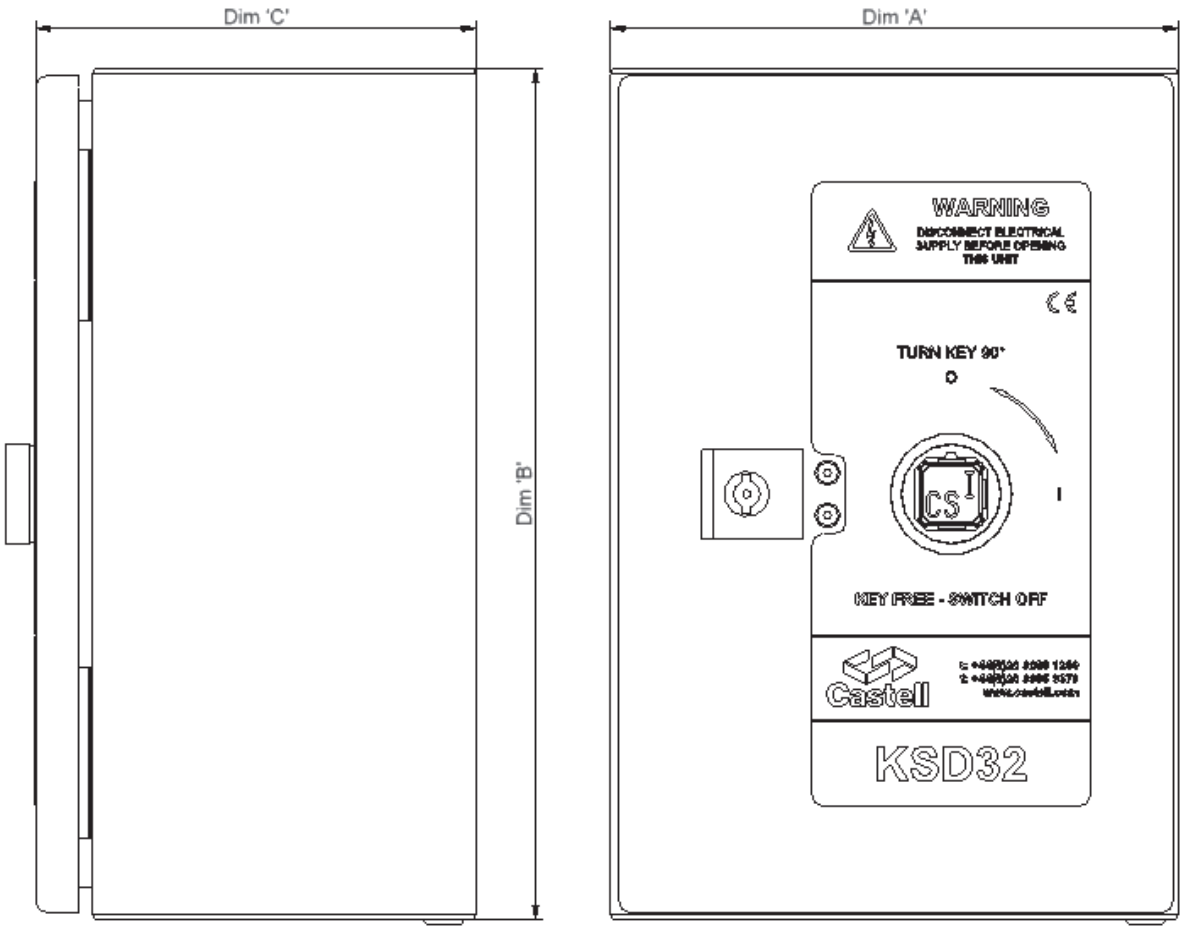


| KSD Enclosure Dimensions | | | | | | |
|---|---|---|---|---|---|---|
| **Dim** | **KSD32** | **KSD63** | **KSD125** | **KSD160** | **KSD250** | **KSD315** |
| **A** | 200mm | 200mm | 300mm | 300mm | 380mm | 380mm |
| **B** | 300mm | 300mm | 400mm | 400mm | 600mm | 600mm |
| **C** | 155mm | 155mm | 210mm | 210mm | 210mm | 210mm |

While every effort has been made to ensure the accuracy of the information provided, no liability can be taken for any errors or omission.
Castell Safety International Limited reserves the right to alter specifications and introduce improvements without prior notice.

## Wiring Diagram

***Note:*** *For safe mounting, use security screws*

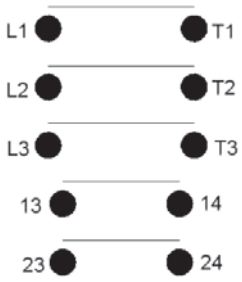


3 Pole 2N/O AUX

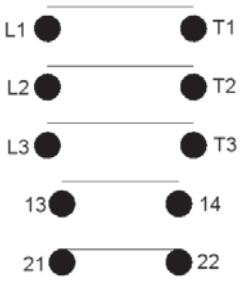


3 Pole 1N/O 1N/C AUX

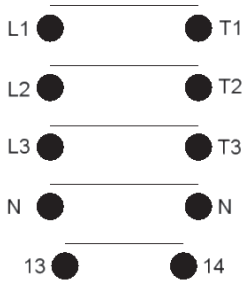


4 Pole 1N/O AUX

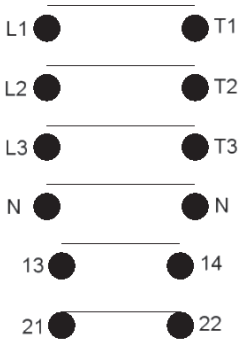


4 Pole 1N/O 1N/C AUX

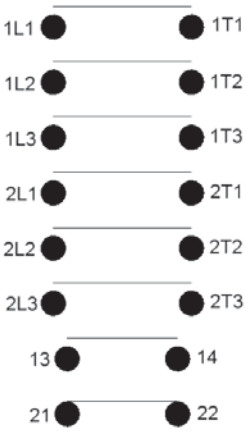


6 Pole 1N/O 1N/C AUX

While every effort has been made to ensure the accuracy of the information provided, no liability can be taken for any errors or omission.
Castell Safety International Limited reserves the right to alter specifications and introduce improvements without prior notice.

## Order Information

| | Product Type | 1 | | 2 | 3 | | 4 | | 5 | 6 | | 7 | 8 |
|---|---|---|---|---|---|---|---|---|---|---|---|---|---|
| Part Number | KSD | | - | | | - | | - | | | - | | |
| Example | KSD | 32 | - | FS | S | - | F | - | CC | 4 | - | C/O | 2 |

| 9 |
|---|
| ABC |

| | | |
|---|---|---|
| 1 | Isolation | 20 amps (UL:20A/CSA:16A) / 32 amps (UL&CSA:30A)<br>63 amps (UL&CSA:65A) |
| 2 | Lock portion type | FS (1) / Q (1) |
| 3 | Material | B = Brass / S = Stainless steel |
| 4 | Mounting | P = Panel mount (back of board)/<br>F = Front of board mount, with enclosure |
| 5 | Contacts arrangement in normal position | CO = no/nc arrangement (contacts closed/opened)/<br>CC = nc arrangement (all contacts closed) |
| 6 | Number of contacts | 4 = standard contacts number |
| 7 | Contacts arrangement in normal position | *see item 5 |
| 8 | Number of contacts | 2 = standard contacts number |
| 9 | Lock portion symbol | FS (1) up to 3 characters / Q (1) up to 6 characters |

(1) **FS - Lock type** Up to 3 characters **Q - Lock type** Up to 6 characters

**Special construction available upon enquiry**

## Accessories

| | Product | Part number |
|---|---|---|
| | Flip Cap | FLIP-S |

## Contact Information

Castell Safety International Ltd.
The Castell Building
217 Kingsbury Road
London, England NW9 9PQ

t: +44 (0) 20 8200 1200
f: +44 (0) 20 8905 9378
e: uksales@castell.com

Castell Safety International Ltd.
Oskar-Jäger-Strasse 137
50825 Köln
Germany

t: +49 (0) 221 1649 794
f: +49 (0) 221 1649 795
e: vertrieb@castell.com

Castell Interlocks Inc.
Suite 800
150 N Michigan Avenue,
Chicago, Illinois 60601
USA

t: +1.312.360.1516
f: +1.312.268.5174
e: ussales@castell.com

Castell Safety China
Building 1, No. 123,
Lane 1165, Jindu Road,
Minhang District,
Shanghai 201108, China.

t: +86 21 61519023
f: +86 21 61519030
e: chinasales@castell.com

While every effort has been made to ensure the accuracy of the information provided, no liability can be taken for any errors or omission.
Castell Safety International Limited reserves the right to alter specifications and introduce improvements without prior notice.

# KSE

## Multi Key Powersafe Electrical Switch

User Manual - Original Language Version

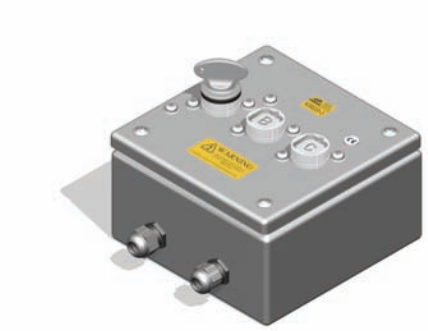

KSE20-FSS-2S-F-E-C/O4

The KSE is a multi-key controlled electrical switch suitable for the isolation or switching of 20, 32, 63 or 150 amp (maximum) current.This type of isolator should be used for short term, off load isolation and operated by suitably qualified personnel. The unit is supplied for mounting into an existing panel or for surface mounting within its own IP65 rated lockable steel enclosure. It is available in FS or Q type lock portions. The KSE is manufactured from either brass or stainless steel making it ideal for use in standard or harsh corrosive environments.

## Operation

Castell dual key access interlocks are used in various applications to control full body access to hazardous areas.

### KSE multi key powersafe electrical switch, exchange key condition

1. **Power is on, isolation key is free and personnel keys are trapped**

2. **Insert and turn isolation key to switch power off and release personnel keys**

3. **Power is off, isolation key is trapped and personnel keys are free**

1. **While the isolation key is free, the power is on. The personnel keys are trapped.**
2. **By inserting and turning the isolation key in the KSE unit, the contact condition changes switching the power off. The personnel keys can now be released and taken by the personnel to unlock the door in the machine area.**
3. **The isolation key stays trapped ensuring power is off as long as the personnel keys are free.**

### KSE multi key powersafe electrical switch, double key condition

1. **Power is on, all keys are trapped**

2. **Turn and release all keys to switch power off**

3. **Power is off, all keys are free**

1. **While the power is on, all keys are trapped.**
2. **By turning the keys, the contact condition changes switching the power off. The keys can now be released and taken by the personnel to unlock the doors in the machine area.**
3. **The power is off until all keys are replaced in the powersafe electrical switch.**

While every effort has been made to ensure the accuracy of the information provided, no liability can be taken for any errors or omission.
Castell Safety International Limited reserves the right to alter specifications and introduce improvements without prior notice.

## Usage

The KSE powersafe electrical switchis designed to be part of a safety system and is used to isolate the power releasing a key which is then used to gain access to a hazardous area via an access interlock such as the AI, AIE or Salus.

The KSE powersafe electrical switch is not designed for security purposes.

No hazardous substances were used in the manufacture of this product. The product can be disposed of in standard waste.

## Installation

Back of panel units should be mounted to a flat surface. Panel and surface mount using suitable fasteners (please refer to drawing on page 4 for more details). The lock face should be sealed to the panel for ingress protection.

Cables should be connected to the switch in accordance with the applicable wiring diagrams. Ensure that the unit is bonded for earth continuity (please refer to drawing on page 4 for installation details).

IMPORTANT:
The interlock should be mounted using anti-tamper fasteners to prevent unauthorised removal.

The KSE range of solenoid controlled switches must be installed by a competent and qualified person who has read and understood these instructions. Please retain this document in your technical file.

## Maintenance

Periodic visual checks should be carried out by the site manager / safety officer.
Do not lubricate lock barrel with oil or grease, use CK Dry Powder Graphite if necessary.

In case of defects beeing detected please contact your nearest Castell Support Department for further actions.
Please see Contact section for contact details.

While every effort has been made to ensure the accuracy of the information provided, no liability can be taken for any errors or omission.
Castell Safety International Limited reserves the right to alter specifications and introduce improvements without prior notice.

## Technical Data

| | |
|---|---|
| **Temperature rating** | -25°C ice free to 55°C |
| **Type of mounting** | 1/4“ or M6 |
| **Weight** | KS20: Front of board mount = 0,8 kg / back of board mount = 0,6 kg |
| | KS32: Front of board mount = 0,8 kg / back of board mount = 1 kg |
| | KS63: 1,5 kg |
| **Material** | Brass/Stainless steel |
| **Enclosure** | Polycarbonate IP65 |
| **Power isolation** | 20A, 32A, and 63A options available |
| **Motor Isolation (AC Values)** | KS20: AC-23A 7.5kW or AC-3 5.5kW |
| | KS32: AC-23A 15kW or AC-3 11kW |
| | KS63: AC-23A 30kW or AC-3 18.5kW |
| **Switch approvals** | CE or CCC |
| **MTTF Certification** | Available on request |

## Application

A typical application of KSE powersafe electrical switch is machine guarding. It is usually used in combination with an access interlock such as the Salus for part body access or an access interlock with an exchange key for full body access control.

A typical system will isolate machinery and control access to hazardous areas. Inserting the power isolation key in the KSE unit changes the condition of the electrical supply to the machine to a safe condition and enables the release of the personnel keys. These keys are then used to unlock the AIE double key access interlocks. The guards can only be opened when the electrical supply has been switched into a safe condition and only once all the keys have been returned to the KSE interlock can the machine be restarted.

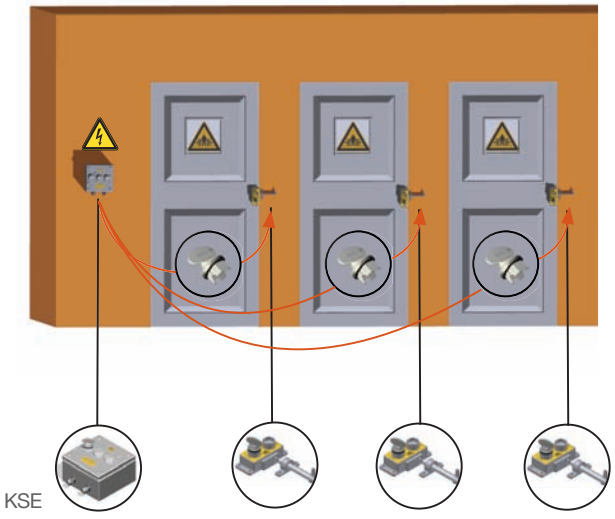


## EC-Declaration

We, the manufacturers, declare that the components, detailed herein and placed on the market, comply with all the essential health and safety requirements applying to them.

Empowered signatory:

Mr T.C. Whelan
Managing Director

While every effort has been made to ensure the accuracy of the information provided, no liability can be taken for any errors or omission.
Castell Safety International Limited reserves the right to alter specifications and introduce improvements without prior notice.

## Drawing

Dimensions:
**in mm**

***Note:*** *For safe mounting, use security screws*

KSE, panel mount (3 lock portions)

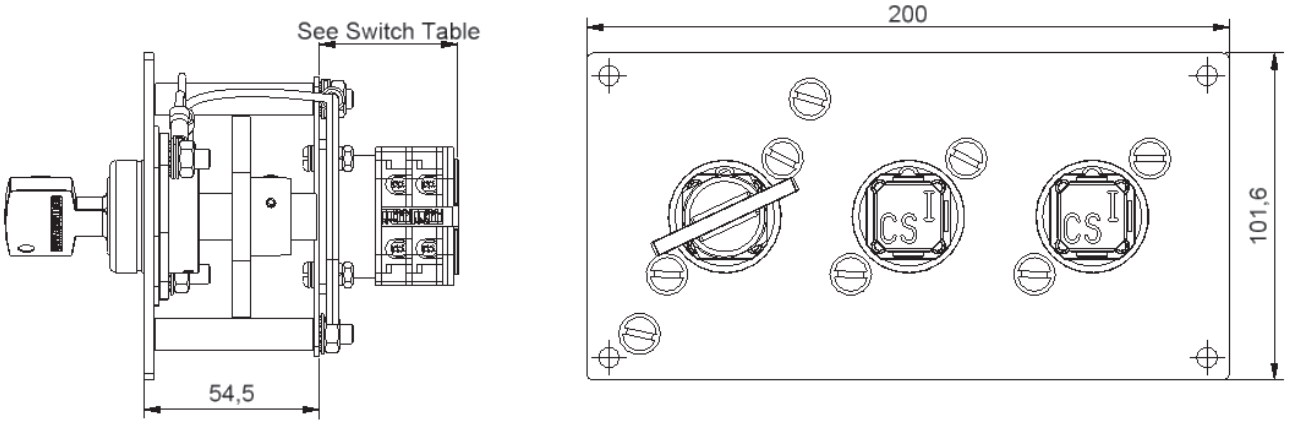


KSE, surface mount (3 lcok portions)

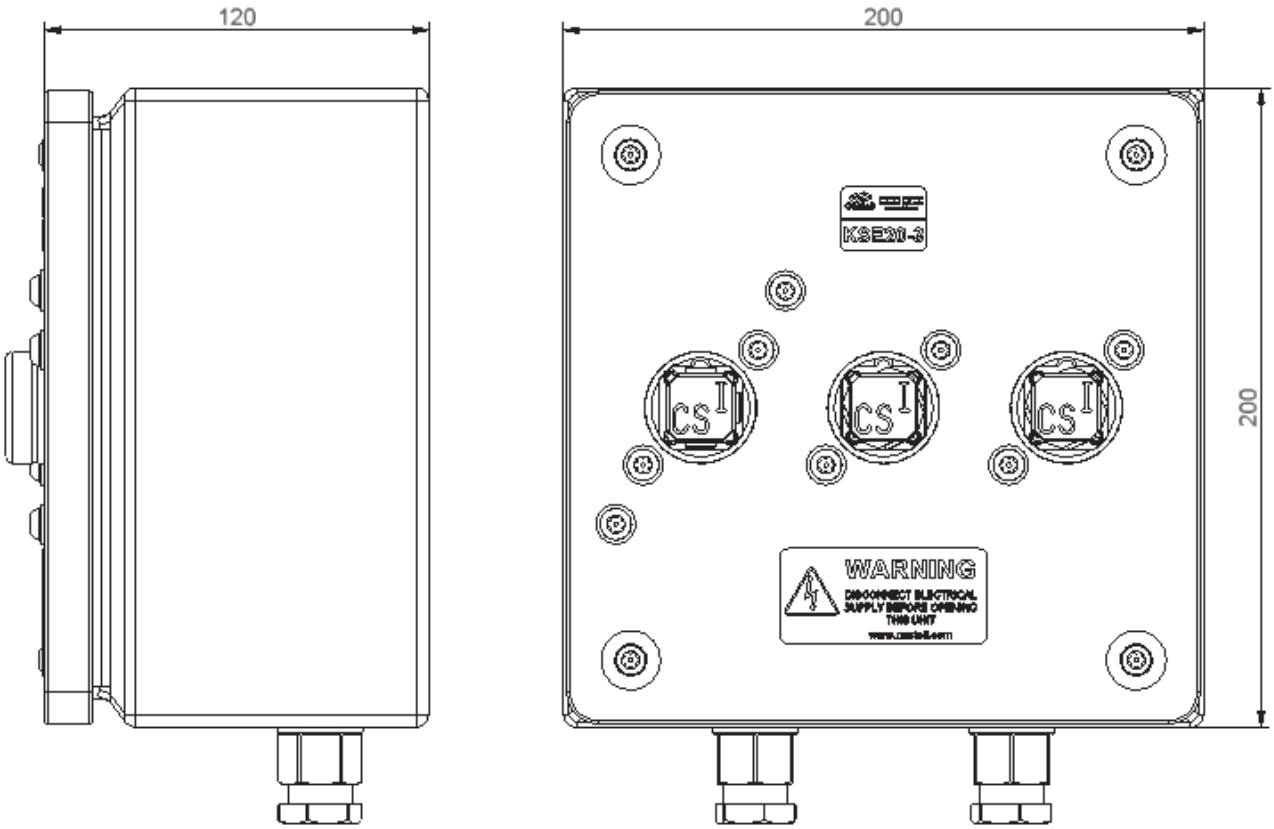


While every effort has been made to ensure the accuracy of the information provided, no liability can be taken for any errors or omission.
Castell Safety International Limited reserves the right to alter specifications and introduce improvements without prior notice.

## Drawing

Dimensions:
**in mm**

***Note:*** *For safe mounting, use security screws*

KSE, 2 lock portions

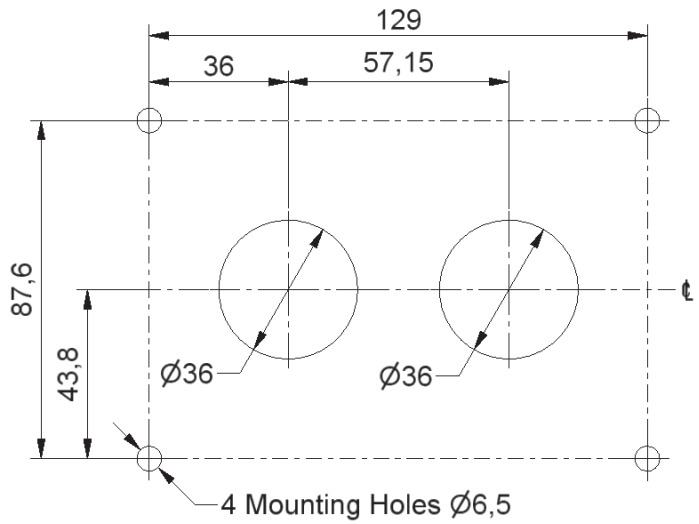


KSE, 3 lock portions

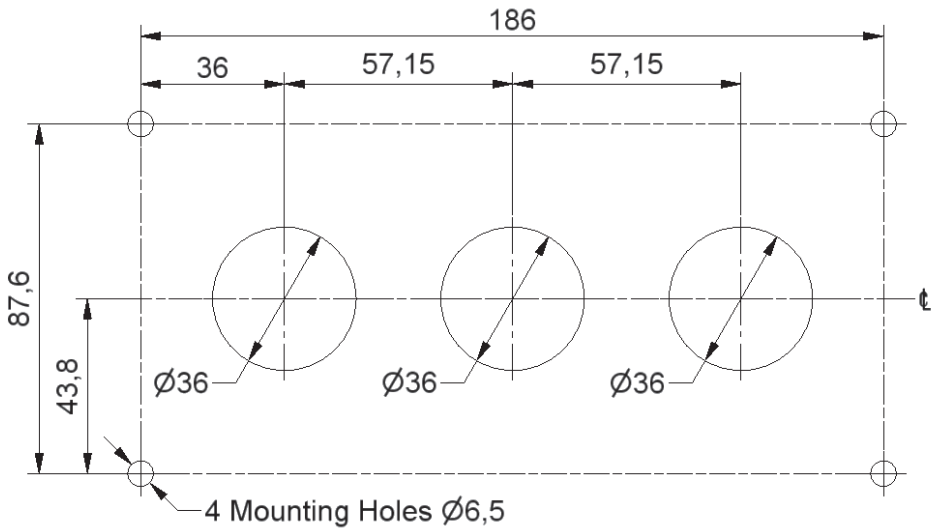


While every effort has been made to ensure the accuracy of the information provided, no liability can be taken for any errors or omission.
Castell Safety International Limited reserves the right to alter specifications and introduce improvements without prior notice.

## Wiring Diagram

Key Free, Switch off

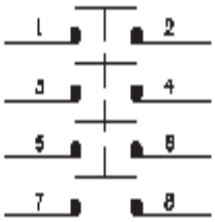


Key Free, 2 NO/2NC

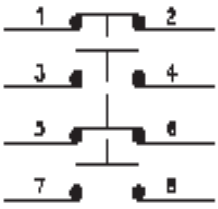


While every effort has been made to ensure the accuracy of the information provided, no liability can be taken for any errors or omission.
Castell Safety International Limited reserves the right to alter specifications and introduce improvements without prior notice.

## Order Information

| | Product Type | 1 | 2 | 3 | 4 | 5 | 6 | 7 | 8 |
|---|---|---|---|---|---|---|---|---|---|
| Part Number | KSE | | - | | - | - | - | - | - | |
| Example | KSE | 20 | - | FS | B | - | 1S | - | P | - | D | - | C/O | 4 |

9 [ A1 — Isolation Key Symbol (exchange key condition) ] OR [ — Primary Key Symbol (double key condition) ]

10 [ B1 — Personnel Key Symbol (exchange key condition) ] OR [ — Secondary Key Symbol (double key condition ]

| | | |
|---|---|---|
| 1 | **Isolation** | 20 amps (standard) |
| 2 | **Lock portion type** | FS (1) / Q (1) |
| 3 | **Material** | B = Brass / S = Stainless steel |
| 4 | **Secondary lock portion(s)**<br>Secondary lock portions are provided for personnel keys, primary lock portion for the isolation key | 1S / 2S / 3S / 4S / 5S or 6S = 1 / 2 / 3 / 4 / 5 or 6 secondary lock portions respectively |
| 5 | **Mounting** | P = Panel mount (back of board) /<br>F = Front of board mount, with enclosure |
| 5 | **Key condition** | E = Exchange key condition /<br>D = Double key condition (simulataneous removal of all keys) |
| 7 | **Contacts arrangement in normal position** | C/O = no/nc arrangement (contacts closed/opened)/<br>CC = nc arrangement (all contacts closed) |
| 8 | **Number of contacts** | 4 / 6 (standard) |
| 11 | **Lock portion symbol:**<br>Isolation key (for exchange key condition)<br>Primary key (for double key condition) | FS (1) up to 3 characters / Q (1) up to 6 characters |
| 12 | **Lock portion symbol:**<br>Personnel key (for exchange key condition)<br>Secondary key (for double key condition) | FS (1) up to 3 characters / Q (1) up to 6 characters |

(1) **FS - Lock type** Up to 3 characters **Q - Lock type** Up to 6 characters

**Special construction available upon enquiry**

## Contact Information

Castell Safety International Ltd.
The Castell Building
217 Kingsbury Road
London, England NW9 9PQ

t: +44 (0) 20 8200 1200
f: +44 (0) 20 8905 9378
e: uksales@castell.com

Castell Safety International Ltd.
Oskar-Jäger-Strasse 137
50825 Köln
Germany

t: +49 (0) 221 1649 794
f: +49 (0) 221 1649 795
e: vertrieb@castell.com

Castell Interlocks Inc.
Suite 800
150 N Michigan Avenue,
Chicago, Illinois 60601
USA

t: +1.312.360.1516
f: +1.312.268.5174
e: ussales@castell.com

Castell Safety China
Building 1, No. 123,
Lane 1165, Jindu Road,
Minhang District,
Shanghai 201108, China.

t: +86 21 61519023
f: +86 21 61519030
e: chinasales@castell.com

While every effort has been made to ensure the accuracy of the information provided, no liability can be taken for any errors or omission.
Castell Safety International Limited reserves the right to alter specifications and introduce improvements without prior notice.

# KSS

## Solenoid Controlled Switch

User Manual - Original Language Version

S20-FSB-F-CC4-110A

The KSS is a heavy-duty solenoid controlled key driven electrical switch interlock ideal for the controlled isolation or switching of low current. This product is used where a process can send a signal to release a key, e.g. a robot has to finish a cycle prior to isolation. Upon removal of the key, the KSS switch contacts change to isolate the process. This type of isolator should be used for short term, off load isolation. The unit is ready for mounting into an existing panel or for surface mounting within its own IP65 rated lockable steel enclosure. The KSS is manufactured from either brass or stainless steel making it suitable for use in standard or harsh corrosive environments.

## Operation

The Castell KSS Solenoid Controlled Switch is typically used for machine isolation in applications where a machine has to finish a cycle prior to isolation.

### KSS Solenoid Controlled Switch

1. **Key is trapped while power is on, solenoid is de-energised.**
2. **An external signal is received and LED is illuminated. Push the button to energise the solenoid and remove the key.**
3. **Solenoid is energised, switch is locked out and key is free.**

1. **While the power is on and a machine is running, the key is trapped in the Solenoid Controlled Switch.**
2. **To release the key, an external signal must be received to energise the solenoid. With the solenoid energised, the LED will illuminate to confirm that the key can be removed ensuring the power is off.**
3. **The key can now be removed and taken to open the door lock and gain access to the machine area.**

The KSS is available for different switching loads as KSS20 and KSS32 (20 amps power isolation respectively. See order information on page 7 for more details).

The KSS is available with different solenoid voltages as AC: 24, 110 or 240 V or DC: 12, 24, 110, 240 V (see order information on page 7 for more details).

The KSS comes with 4 or 6 contacts as standard with contacts arrangements as 2NO/2NC, 4NC or 3NO/3NC or 6NC.

The KSS is available as a back of panel mount (BOB) and as a surface mount version with an enclosure (FOB).

While every effort has been made to ensure the accuracy of the information provided, no liability can be taken for any errors or omission.
Castell Safety International Limited reserves the right to alter specifications and introduce improvements without prior notice.

## Usage

The KSS solenoid controlled switch is designed to be part of a safety system and is used to isolate the power releasing a key which is then used to gain access to a hazardous area via an access interlock such as the AI, AIE or Salus.

The KSS solenoid controlled switch is not designed for security purposes.

No hazardous substances were used in the manufacture of this product. The product can be disposed of in standard waste.

## Installation

Back of panel units should be mounted to a flat surface using suitable fasteners (please refer to drawing on page 4 for more details). The lock face should be sealed to the panel for ingress protection.

Cables should be connected to the switch in accordance with the applicable wiring diagrams. Ensure that the unit is bonded for earth continuity (see drawing on page 6 for more installation details).

IMPORTANT:
The interlock should be mounted using anti-tamper fasteners to prevent unauthorised removal.

The KSS range of solenoid controlled switches must be installed by a competent and qualified person who has read and understood these instructions. Please retain this document in your technical file.

## Maintenance

Periodic visual checks should be carried out by the site manager / safety officer.
Do not lubricate lock barrel with oil or grease, use CK Dry Powder Graphite if necessary.

In case of defects beeing detected please contact your nearest Castell Support Department for further actions.
Please see Contact section for contact details.

While every effort has been made to ensure the accuracy of the information provided, no liability can be taken for any errors or omission.
Castell Safety International Limited reserves the right to alter specifications and introduce improvements without prior notice.

## Technical Data

| | |
|---|---|
| **Temperature rating** | -25°C to +55°C |
| **Type of mounting** | Surface mount using suitable fasteners (see drawing on page 4-5 for hole details) |
| **Weight** | 2kg |
| **Material** | Brass locks with powder coated mild stell enclosure |
| **Power isolation** | 20A |
| **Switch approvals** | BS,UL,CSA & VDE or CCC |
| **MTTF Certification** | Available on request |

## Application

A typical application of KSS solenoid controleld switch is machine guarding. It is usually used in combination with an access interlock such as the Salus for part body access or an access interlock with an exchange key for full body access control.

The KSS breaks the machine safety circuit, ensuring a machine is shut down. Once the machine has completed the cycle, an external signal is received by the solenoid, which is indicated by an illuminated LED. Activating the green button on the KSS will enable the key to be turned and removed ensuring the power is locked out. The key can then be taken to the AIE access interlock to enable access to the machine.

The machine cannot be restarted until the door is closed, the bolt is trapped in the AIE access interlock and the key is removed and taken to the KSS solenoid controlled switch.

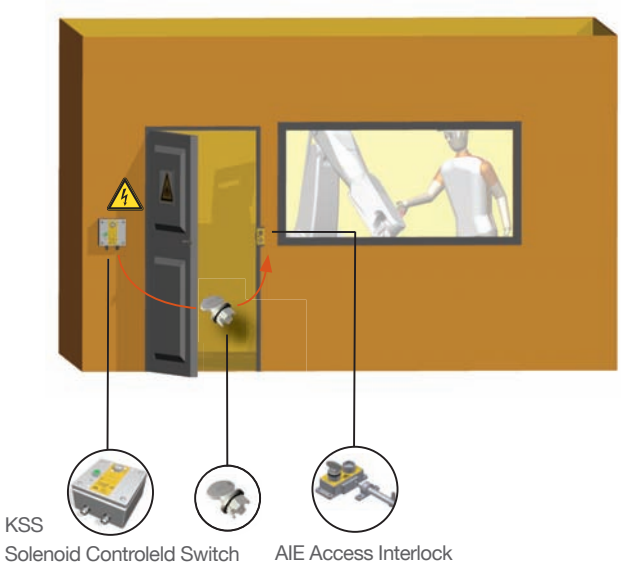


## EC-Declaration

We, the manufacturers, declare that the components, detailed herein and placed on the market, comply with all the essential health and safety requirements applying to them.

Empowered signatory:

Mr T.C. Whelan
Managing Director

While every effort has been made to ensure the accuracy of the information provided, no liability can be taken for any errors or omission.
Castell Safety International Limited reserves the right to alter specifications and introduce improvements without prior notice.

## Drawing

Dimensions:
**in mm**

***Note:*** *For safe mounting, use security screws*

KSS, panel mount (BOB: back of board)

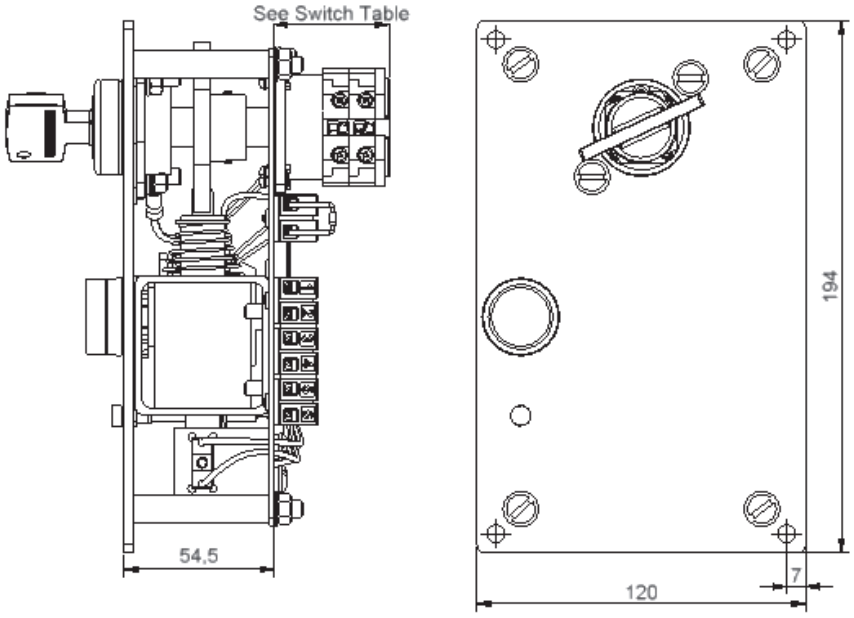


KSS, surface mounting (FOB: front of board)

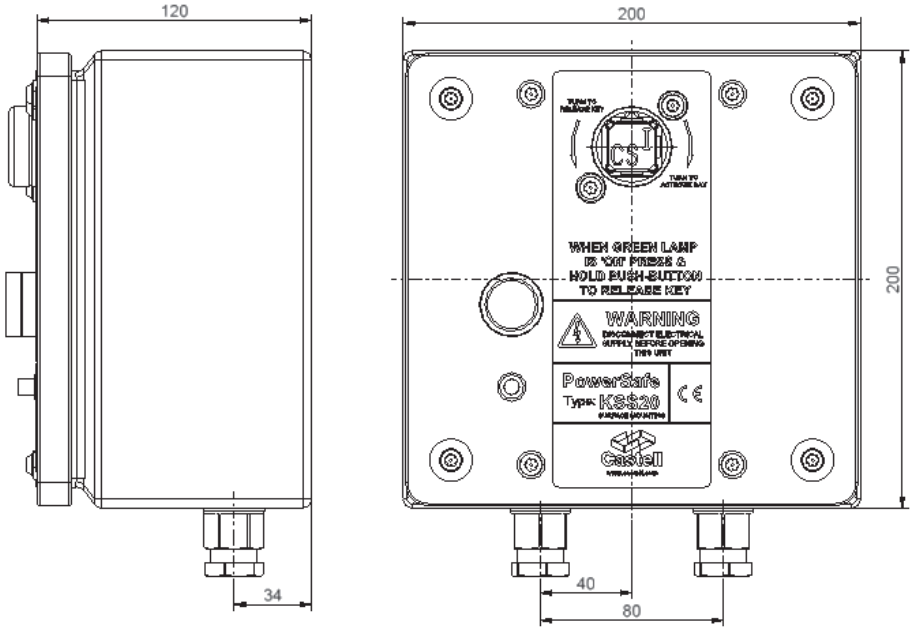


While every effort has been made to ensure the accuracy of the information provided, no liability can be taken for any errors or omission.
Castell Safety International Limited reserves the right to alter specifications and introduce improvements without prior notice.

## Drawing

Dimensions:
**in mm**

***Note:*** *For safe mounting, use security screws*

KSS

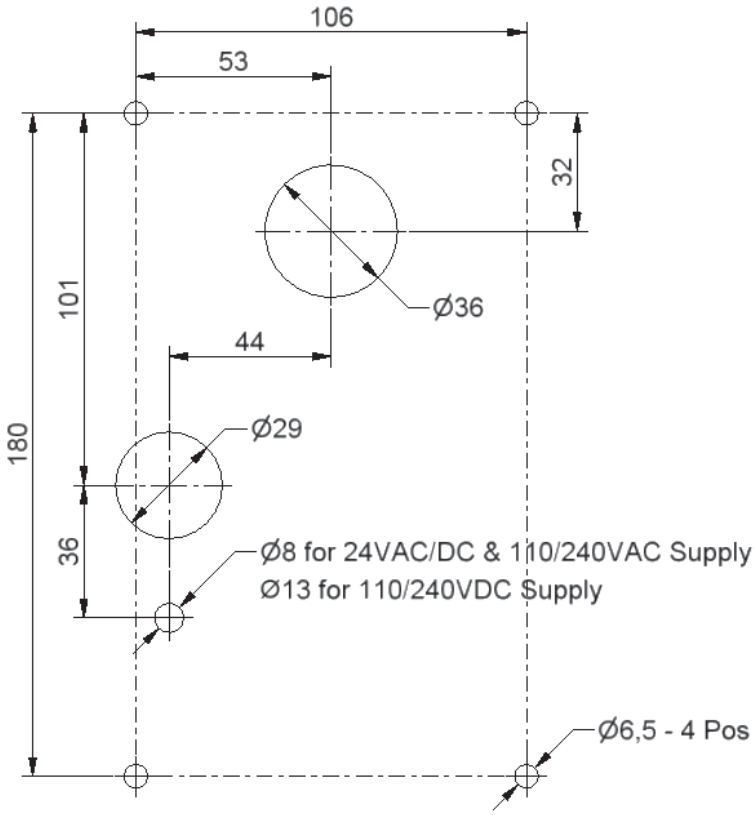


While every effort has been made to ensure the accuracy of the information provided, no liability can be taken for any errors or omission.
Castell Safety International Limited reserves the right to alter specifications and introduce improvements without prior notice.

## Wiring Diagram

### KSS, AC

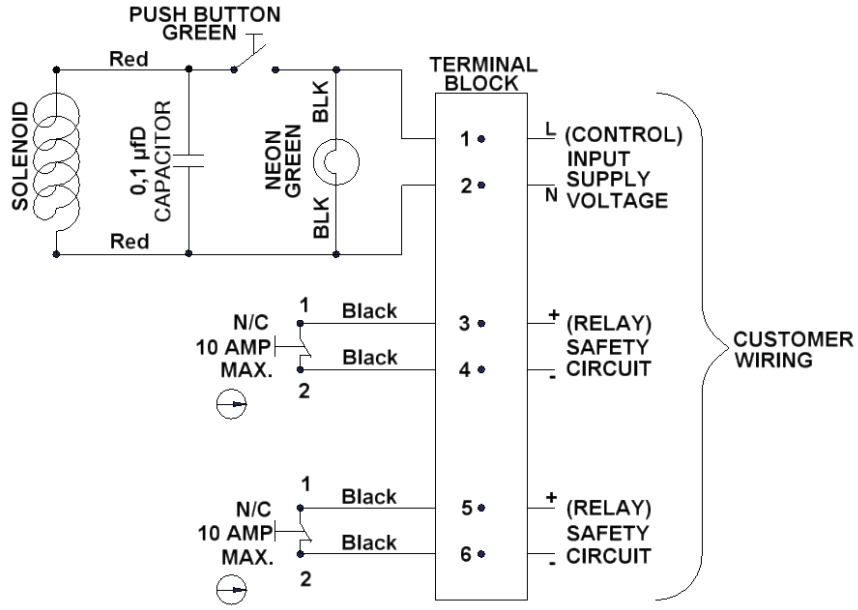


### KSS, DC

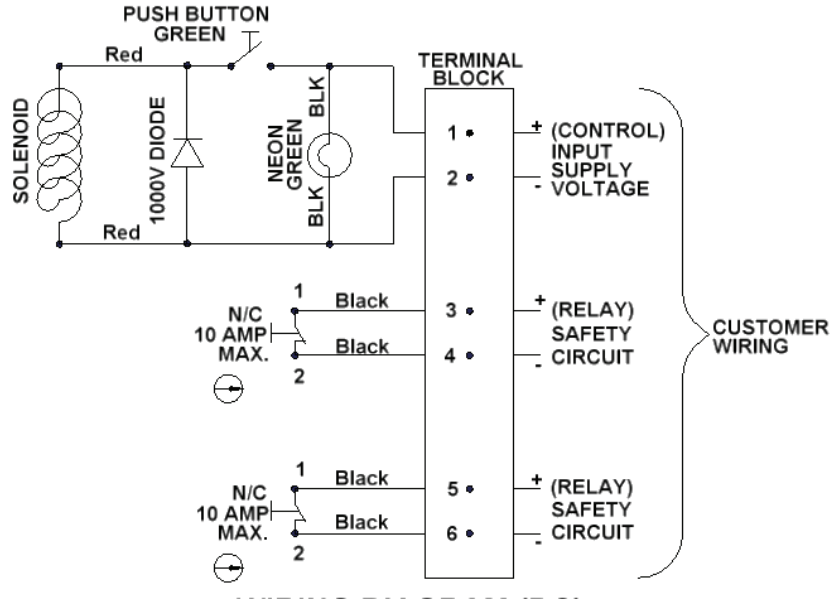


While every effort has been made to ensure the accuracy of the information provided, no liability can be taken for any errors or omission.
Castell Safety International Limited reserves the right to alter specifications and introduce improvements without prior notice.

## Order Information

| | Product Type | 1 | | 2 | 3 | | 4 | | 5 | 6 | | 7 | 8 |
|---|---|---|---|---|---|---|---|---|---|---|---|---|---|
| Part Number | S | | - | | | - | | - | | | - | | |
| Example | S | 20 | - | FS | B | - | F | - | CC | 4 | - | 110 | A |

| 9 |
|---|
| ABC |

| | | |
|---|---|---|
| 1 | **Isolation** | 20 amps (standard) |
| 2 | **Lock portion type** | FS (1) / Q (1) |
| 3 | **Material** | B = Brass / S = Stainless steel |
| 4 | **Mounting** | P = Panel mount (back of board) /<br>F = Front of board mount, with enclosure |
| 5 | **Contacts arrangement in normal position** | CO = no/nc arrangement (contacts closed/opened) /<br>CC = nc arrangement (all contacts closed) |
| 6 | **Number of contacts** | 4 / 6 (standard) |
| 7 | **Control voltage** | 110 / 24 / 240 (standard) |
| 8 | **Current** | VAC / VDC |
| 9 | **Lock portion symbol** | FS (1) up to 3 characters / Q (1) up to 6 characters |

(1) **FS - Lock type** Up to 3 characters **Q - Lock type** Up to 6 characters

**Special construction available upon enquiry**

## Accessories

| | Product | Part number |
|---|---|---|
| | Flip Cap | FLIP-S |

## Contact Information

Castell Safety International Ltd.
The Castell Building
217 Kingsbury Road
London, England NW9 9PQ

t: +44 (0) 20 8200 1200
f: +44 (0) 20 8905 9378
e: uksales@castell.com

Castell Safety International Ltd.
Oskar-Jäger-Strasse 137
50825 Köln
Germany

t: +49 (0) 221 1649 794
f: +49 (0) 221 1649 795
e: vertrieb@castell.com

Castell Interlocks Inc.
Suite 800
150 N Michigan Avenue,
Chicago, Illinois 60601
USA

t: +1.312.360.1516
f: +1.312.268.5174
e: ussales@castell.com

Castell Safety China
Building 1, No. 123,
Lane 1165, Jindu Road,
Minhang District,
Shanghai 201108, China.

t: +86 21 61519023
f: +86 21 61519030
e: chinasales@castell.com

While every effort has been made to ensure the accuracy of the information provided, no liability can be taken for any errors or omission.
Castell Safety International Limited reserves the right to alter specifications and introduce improvements without prior notice.

# KSSE

## Multi Key Solenoid Controlled Switch

User Manual - Original Language Version

E20-FSS-3D-F-C/O4-110A

The KSSE is a solenoid controlled, multi-key electrical switch for the controlled isolation of low current. This product is used where the controlled isolation of a machine needs to take place, i.e. where a robot has to finish a cycle prior to isolation and where multiple entry points to the protected area are required. The solenoid is continuously rated, and its position is electrically monitored. This type of isolator should be used for short term, off load isolation. The unit is supplied capable of being mounted into an existing panel or for surface mounting within its own IP65 rated lockable steel enclosure. The KSSE is manufactured from either brass or stainless steel making it ideal for use in standard or harsh corrosive environments.

## Operation

Castell multi key solenoid controlled switches are typically used for machine isolation in applications where a machine has to finish a cycle prior to isolation.

### KSSE multi key solenoid controlled switch, exchange key condition

1. **Isolation Key is free while power is on, solenoid is de-energised. Personnel keys are trapped.**
2. **Insert and turn isolation key to switch power off. Once external signal is received (LED illuminates), push the button to de-energize the solenoid and release personnel keys.**
3. **Power is off, isolation key is trapped and personnel keys are free.**

1. **While the isolation key is free, the power is on. Personnel keys are trapped.**
2. **By inserting and turning the isolation key in the KSSE, the contact condition changes switching the power off. Once the machine has finished the cycle, a signal is sent to the KSSE to energise the solenoid and an LED illuminates. The personnel keys can now be released by pushing the button. These keys can be taken by personnel to unlock the doors in the machine area.**
3. **The Isolation Keys stay trapped ensuring power is off until all personnel keys are replaced in the KSSE unit.**

While every effort has been made to ensure the accuracy of the information provided, no liability can be taken for any errors or omission.
Castell Safety International Limited reserves the right to alter specifications and introduce improvements without prior notice.

## Operation

### KSSE multi key solenoid controlled switch, double key condition

1. All keys are trapped while power is on, solenoid is de-energised.
2. Turn and release all keys to change the condition of the contacts interrupting power supply. Once external signal is received (LED illuminates), push the button to energize the solenoid and release the keys.
3. While all keys are free, the power supply is interrupted.

1. While all keys are trapped, the switch for the main power supply is closed enabling the power supply.
2. By turning and releasing the keys, the contacts condition changes switching the power off. Once the machine has finished the cycle, a signal is sent to the KSSE to energise the solenoid and an LED illuminates. The Keys can now be released by pushing the button. These keys should be taken by the personnel to unlock the doors in the machine area.
3. The power is off until all keys are replaced in the KSSE unit and turned, switching the contact condition to open.

While every effort has been made to ensure the accuracy of the information provided, no liability can be taken for any errors or omission.
Castell Safety International Limited reserves the right to alter specifications and introduce improvements without prior notice.

## Usage

The KSSE multi key solenoid controlled switch is designed to be part of a safety system and is used to isolate the power releasing a key which is then used to gain access to a hazardous area via an access interlock such as the AI, AIE or Salus.

The KSSE multi key solenoid controlled switch is not designed for security purposes.

No hazardous substances were used in the manufacture of this product. The product can be disposed of in standard waste.

## Installation

Back of panel units should be mounted to a flat surface using suitable fasteners. Please refer to drawing on page 5 for more details). The lock face should be sealed to the panel for ingress protection.

Cables should be connected to the switch in accordance with the applicable wiring diagrams. Ensure that the unit is bonded for earth continuity (see drawing on page 5 for more installation details).

IMPORTANT:
The interlock should be mounted using anti-tamper fasteners to prevent unauthorised removal.

The KSSE range of multi key solenoid controlled switches must be installed by a competent and qualified person who has read and understood these instructions. Please retain this document in your technical file.

## Maintenance

Periodic visual checks should be carried out by the site manager / safety officer.
Do not lubricate lock barrel with oil or grease, use CK Dry Powder Graphite if necessary.

In case of defects beeing detected please contact your nearest Castell Support Department for further actions.
Please see Contact section for contact details.

While every effort has been made to ensure the accuracy of the information provided, no liability can be taken for any errors or omission.
Castell Safety International Limited reserves the right to alter specifications and introduce improvements without prior notice.

## Technical Data

| | |
|---|---|
| **Temperature rating** | -25°C ice free to +55°C |
| **Type of mounting** | Surface (with enclosure) or panel mount using suitable fasteners (please refer to drawing on page 4 for more details) |
| **Weight** | 4 kg (2 lock portions unit) |
| **Material** | Brass/Stainless steel |
| **Power isolation** | 20A |
| **Switch approvals** | BS,UL,CSA & VDE |
| **MTTF Certification** | Available on request |

## Application

A typical application of KSSE multi key solenoid controleld switch is machine guarding. It is usually used in combination with an access interlock such as the Salus for part body access or an AIE access interlock with an exchange key for full body access control.

The KSS breaks the machine safety circuit, ensuring a machine is shut down once the isolation key is inserted and turned into the unit. Once the machine has completed the cycle, an external signal is received by the solenoid, which is indicated by an illuminated LED. Activating the green button on the KSSE will enable the personnel keys to be turned and removed ensuring the power is locked out. The keys can then be taken to the AIE double key access interlocks to enable access to the machine.

The machine cannot be restarted until all doors are closed, and all personnel keys returned to the KSSE multi key solenoid controlled switch.

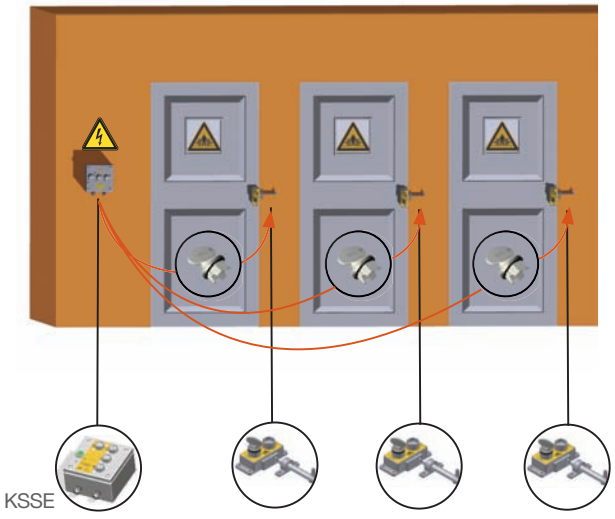


## EC-Declaration

We, the manufacturers, declare that the components, detailed herein and placed on the market, comply with all the essential health and safety requirements applying to them.

Empowered signatory:

Mr T.C. Whelan
Managing Director

While every effort has been made to ensure the accuracy of the information provided, no liability can be taken for any errors or omission.
Castell Safety International Limited reserves the right to alter specifications and introduce improvements without prior notice.

## Drawing

Dimensions:
**in mm**

***Note:*** *For safe mounting, use security screws*

KSSE

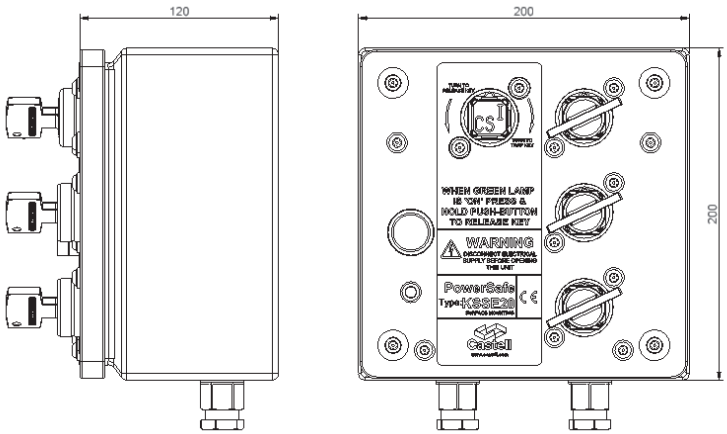


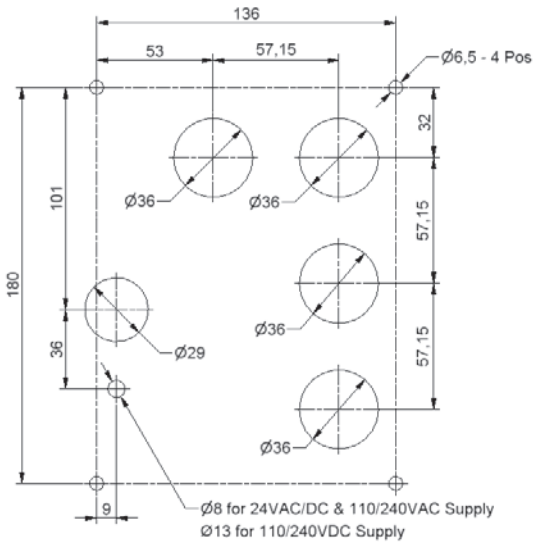


Panel Cut-Out Details

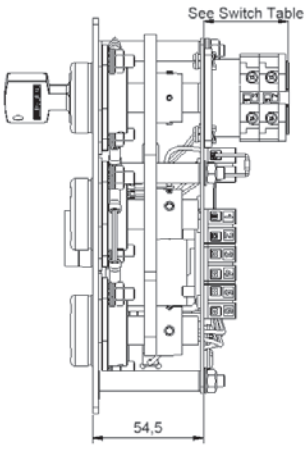


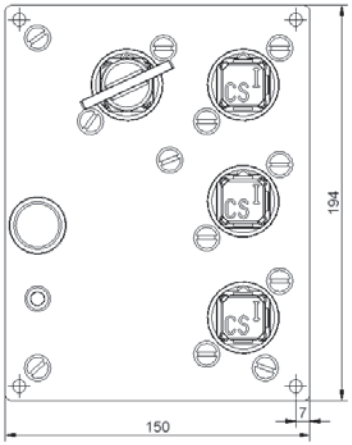


While every effort has been made to ensure the accuracy of the information provided, no liability can be taken for any errors or omission.
Castell Safety International Limited reserves the right to alter specifications and introduce improvements without prior notice.

## Wiring Diagram

### KSSE, Wiring Diagram DC

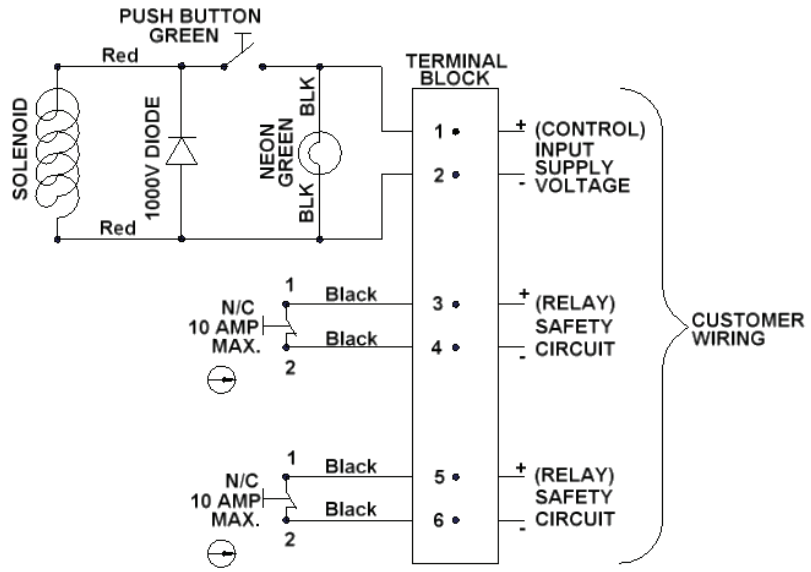


### KSSE, Wiring Diagram AC

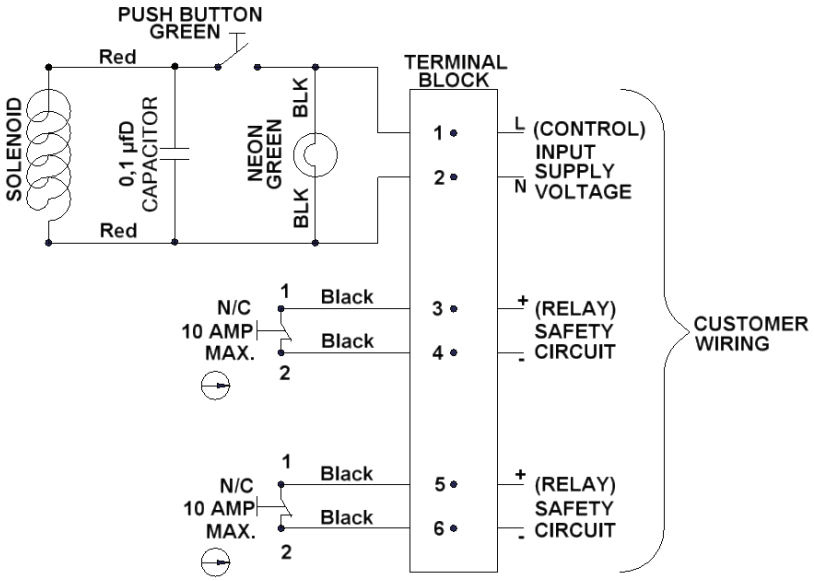


While every effort has been made to ensure the accuracy of the information provided, no liability can be taken for any errors or omission.
Castell Safety International Limited reserves the right to alter specifications and introduce improvements without prior notice.

## Order Information

| | Product Type | 1 | | 2 | 3 | | 4 | 5 | | 6 | | 7 | 8 | | 9 | 10 |
|---|---|---|---|---|---|---|---|---|---|---|---|---|---|---|---|---|
| Part Number | E | | - | | | - | | | - | | - | | | - | | |
| Example | E | 20 | - | FS | B | - | 1 | D | - | F | - | CC | 4 | - | 110 | A |

**11**
- A1 — **Isolation Key Symbol** (exchange key condition)
- OR
- (blank) — **Primary Key Symbol** (double key condition)

**12**
- B1 — **Personnel Key Symbol** (exchange key condition)
- OR
- (blank) — **Secondary Key Symbol** (double key condition)

| | | |
|---|---|---|
| **1** | **Isolation** | 20 amps (standard) |
| **2** | **Lock portion type** | FS (1) / Q (1) |
| **3** | **Material** | B = Brass / S = Stainless steel |
| **4** | **Secondary** (additional) **lock portion(s)** | 1 / 2 / 3 / 4 / 5 or 6 secondary lock portions |
| **5** | **Key condition** | E = Exchange key condition /<br>D = Double key condition (simulataneous removal of all keys) |
| **6** | **Mounting** | P = Panel mount (back of board) / F = Front of board mount, with enclosure |
| **7** | **Contacts arrangement in normal position** | CO = NO/NC arrangement (contacts closed/opened)/<br>CC = NC arrangement (contacts closed) |
| **8** | **Number of contacts** | 4 / 6 (standard) |
| **9** | **Control voltage** | 110 / 24 / 240 (standard) |
| **10** | **Current** | VAC / VDC |
| **11** | **Lock portion symbol:**<br>Isolation key (for exchange key condition)<br>Primary key (for double key condition) | FS (1) up to 3 characters / Q (1) up to 6 characters |
| **12** | **Lock portion symbol:**<br>Personnel key (for exchange key condition)<br>Secondary key(s) (for double key condition) | FS (1) up to 3 characters / Q (1) up to 6 characters |

(1) **FS - Lock type** Up to 3 characters **Q - Lock type** Up to 6 characters

**Special construction available upon enquiry**

## Contact Information

Castell Safety International Ltd.
The Castell Building
217 Kingsbury Road
London, England NW9 9PQ

t: +44 (0) 20 8200 1200
f: +44 (0) 20 8905 9378
e: uksales@castell.com

Castell Safety International Ltd.
Oskar-Jäger-Strasse 137
50825 Köln
Germany

t: +49 (0) 221 1649 794
f: +49 (0) 221 1649 795
e: vertrieb@castell.com

Castell Interlocks Inc.
Suite 800
150 N Michigan Avenue,
Chicago, Illinois 60601
USA

t: +1.312.360.1516
f: +1.312.268.5174
e: ussales@castell.com

Castell Safety China
Building 1, No. 123,
Lane 1165, Jindu Road,
Minhang District,
Shanghai 201108, China.

t: +86 21 61519023
f: +86 21 61519030
e: chinasales@castell.com

While every effort has been made to ensure the accuracy of the information provided, no liability can be taken for any errors or omission.
Castell Safety International Limited reserves the right to alter specifications and introduce improvements without prior notice.

# KSUPS

## Solenoid Controlled Switch

User Manual - Original Language Version

KSUPS-FSB-P-CO4-110VAC

The KSUPS is a solenoid controlled key driven electrical switch for the controlled isolation or switching of low current in conjunction with the control circuit. It is used in applications such as UPS changeover system or where a machine has to finish a cycle prior to isolation. A good example of this is fast, safe access to robot cells where the robot needs to return to a safe or home position before entry can be gained. The KSUPS is manufactured from either brass or stainless steel making it ideal for use in standard or harsh corrosive environments. The unit is supplied ready for mounting into an existing panel.

## Operation

The Castell KSUPS solenoid control switch is typically used in either an uninterruptable power supply control system or for machine isolation in applications where a machine has to finish a cycle prior to isolation.

### KSUPS Solenoid Controlled Switch

1. **Key is trapped while power is on, solenoid is de-energised.**
2. **Solenoid is energised by external signal. As the LED illuminates, key can be turned and released.**
3. **Solenoid is energized, switch is locked out and key is free.**

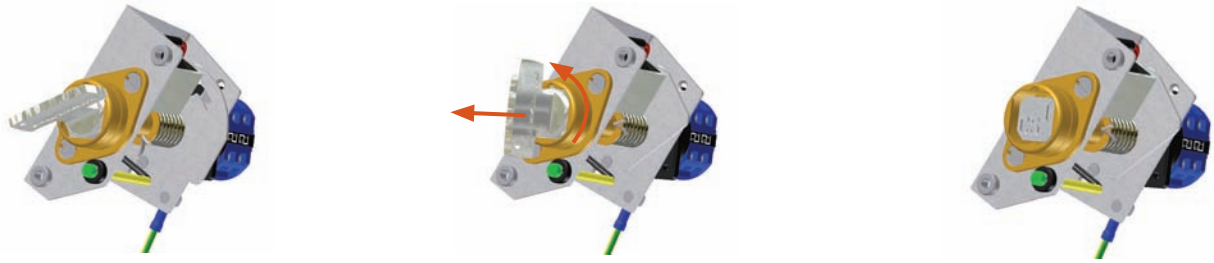

1. **While the power is on and a machine is running, the key is trapped in the Solenoid Controlled Switch.**
2. **To release the key, an external signal must be received to energise the solenoid. With the solenoid energised, the LED will illuminate to confirm that the key can be removed ensuring the power is off.**
3. **The key can now be removed and taken to open the door lock and gain acces to the machine area.**

The KSUPS is available with different solenoid voltages as AC or DC: 24, 110 or 240 V (see order information on page 6 for more details).

The KSUPS comes with 4 contacts as standard with contacts arrangements as 2NO/2NC, 4NC, but auxiliary set of contacts are available on request.

While every effort has been made to ensure the accuracy of the information provided, no liability can be taken for any errors or omission.
Castell Safety International Limited reserves the right to alter specifications and introduce improvements without prior notice.

## Usage

The KSUPS solenoid controlled switch is designed to be part of a safety system and is used to isolate the power releasing a key which is then used to gain access to a hazardous area via an access interlock such as the AI, AIE or Salus.

The KSUPS solenoid controlled switch is not designed for security purposes.

No hazardous substances were used in the manufacture of this product. The product can be disposed of in standard waste.

## Installation

The back of panel units should be mounted to a flat surface, holes should be drilled in the panel to accept the lock mounting (please refer to drawing on page 4 for more details). The lock face should be sealed to the panel for ingress protection.

Cables should be connected to the switch in accordance with the applicable wiring diagrams. Ensure that the unit is bonded for earth continuity (see drawing on page 4 for more installation details).

IMPORTANT:
The interlock should be mounted using anti-tamper fasteners to prevent unauthorised removal.

The KSUPS range of solenoid controlled switches must be installed by a competent and qualified person who has read and understood these instructions. Please retain this document in your technical file.

## Maintenance

Periodic visual checks should be carried out by the site manager / safety officer.
Do not lubricate lock barrel with oil or grease, use CK Dry Powder Graphite if necessary.

In case of defects beeing detected please contact your nearest Castell Support Department for further actions.
Please see Contact section for contact details.

While every effort has been made to ensure the accuracy of the information provided, no liability can be taken for any errors or omission.
Castell Safety International Limited reserves the right to alter specifications and introduce improvements without prior notice.

## Technical Data

| | |
|---|---|
| **Temperature rating** | -25°C ice free to +55°C. |
| **Type of mounting** | Panel mount using suitable fasteners (please refer to drawing on page 4 for more details) |
| **Weight** | 0,6 kg |
| **Material** | Brass/Stainless steel |
| **Power isolation** | 20A |
| **Voltage** | 24 VDC and 240 VAC, 110 VAC |
| **Switch approvals** | BS,UL,CSA & VDE |
| **MTTF Certification** | Available on request |

## Application

A typical application of KSUPS Solenoid Controleld Switch is machine guarding. It is usually used in combination with an Access Interlock such as the Salus for part body access or an Access Interlock with an exchange key for full body access control.

The KSUPS breaks the machine safety circuit, ensuring a machine is shut down. Once the Machine has completed the cycle, an external signal is received by the solenoid. The LED will illuminate and the key can be turned and removed, ensuring the power is locked out. The key can then be taken to the Salus Automatic Access Interlock to enable access to the machine.

The machine cannot be restarted until the door is closed, the bolt is trapped in the Access Interlock and the key is removed and taken to the KSUPS solenoid controlled switch.

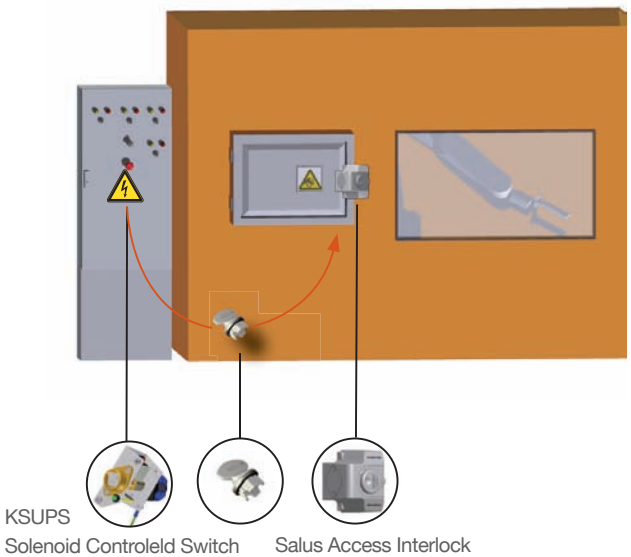


## EC-Declaration

We, the manufacturers, declare that the components, detailed herein and placed on the market, comply with all the essential health and safety requirements applying to them.

Empowered signatory:

Mr T.C. Whelan
Managing Director

While every effort has been made to ensure the accuracy of the information provided, no liability can be taken for any errors or omission.
Castell Safety International Limited reserves the right to alter specifications and introduce improvements without prior notice.

## Drawing

Dimensions:
**in mm**

***Note:*** *For safe mounting, use security screws*

KSUPS

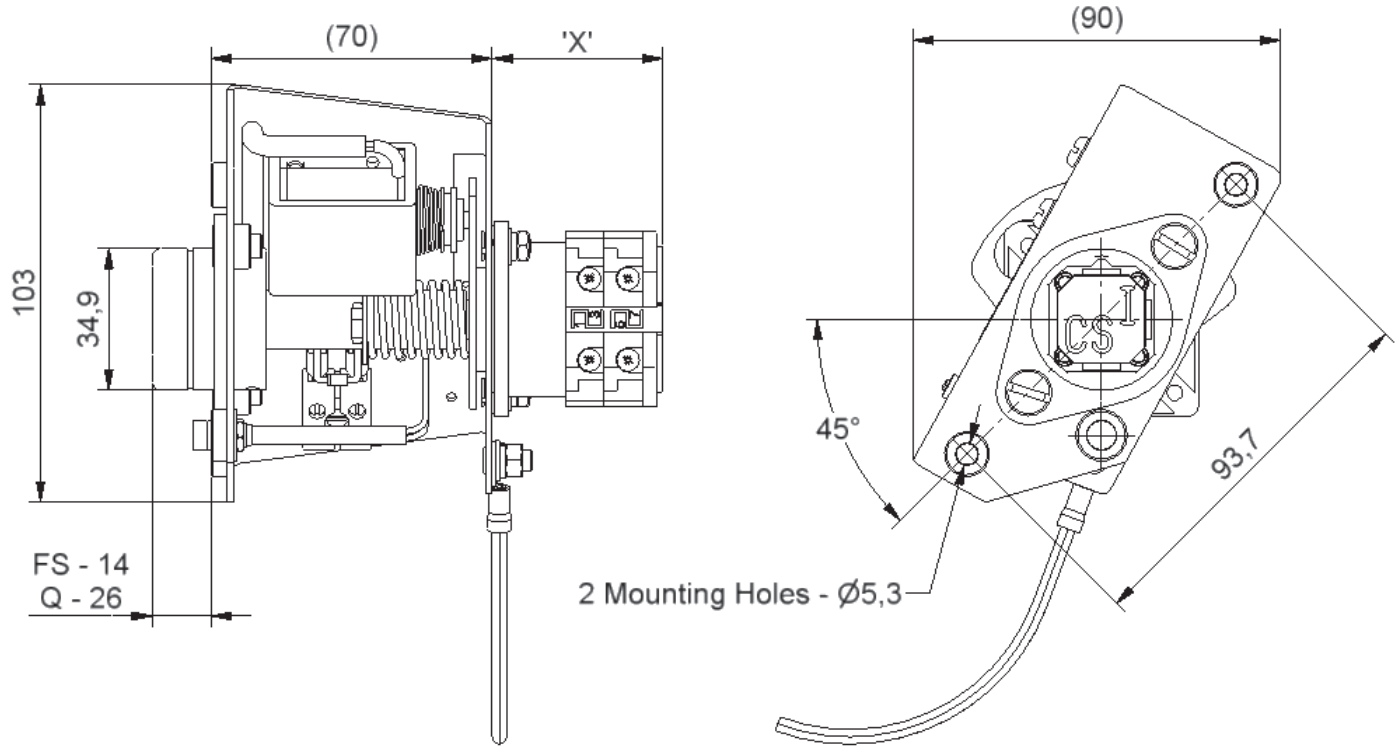


Panel Mounting Details

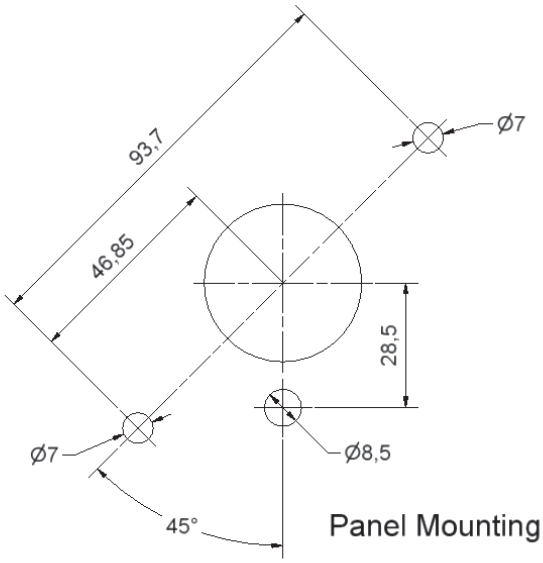


Panel Mounting Details

| Dimension Reference 'X' | |
|---|---|
| No of Poles | Length |
| 4 Poles | 42,0 mm |
| 6 Poles | 51,5 mm |
| 8 Poles | 61,0 mm |
| 10 Poles | 70,5 mm |
| 12 Poles | 80,0 mm |

While every effort has been made to ensure the accuracy of the information provided, no liability can be taken for any errors or omission.
Castell Safety International Limited reserves the right to alter specifications and introduce improvements without prior notice.

## Wiring Diagram

Dimensions:
**in mm**

***Note:*** *For safe mounting, use security screws*

Solenoid Wiring Diagram (AC)

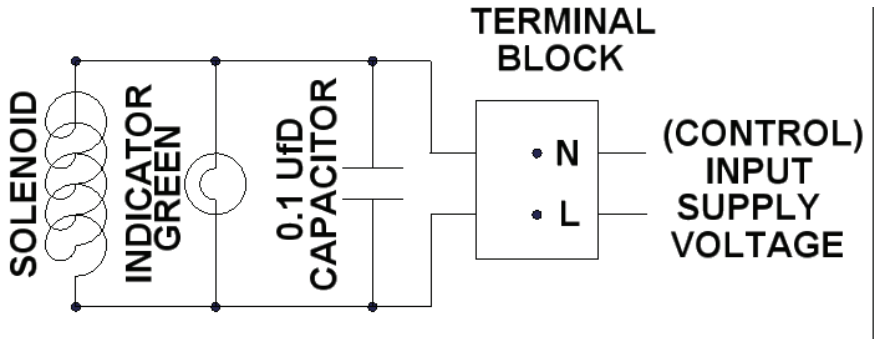


Solenoid Wiring Diagram (DC)

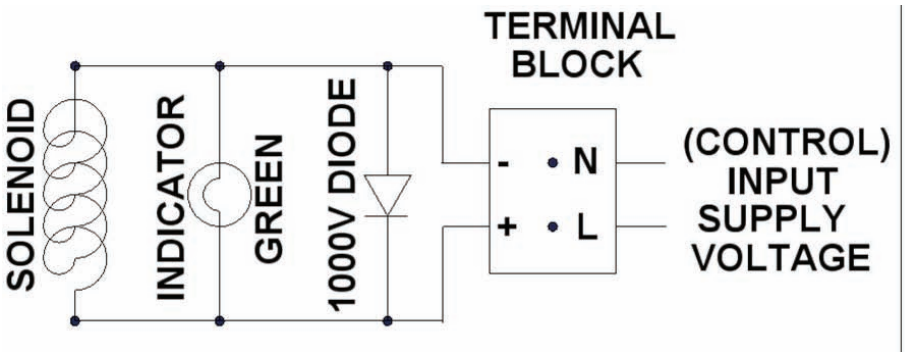


Contacts Wiring Diagram

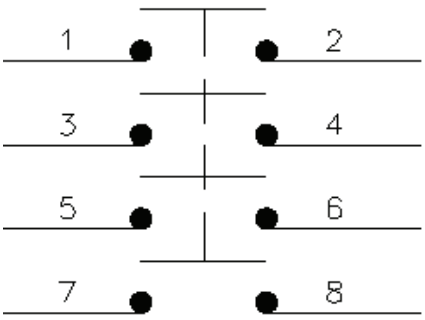


Key Free - Switch off

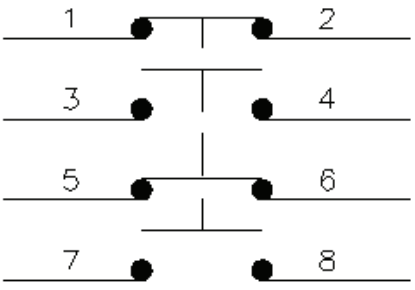


Key Free - 2 NO/2NC

While every effort has been made to ensure the accuracy of the information provided, no liability can be taken for any errors or omission.
Castell Safety International Limited reserves the right to alter specifications and introduce improvements without prior notice.

## Order Information

| | Product Type | 1 | 2 | 3 | 4 | 5 | 6 | 7 |
|---|---|---|---|---|---|---|---|---|
| Part Number | KSUPS - | | | - | | | - | |
| Example | KSUPS - | FS | B | - P - | CO | 4 | - 110 | VAC |

| 8 |
|---|
| ABC |

| | | |
|---|---|---|
| 1 | Lock portion type | FS (1) / Q (1) |
| 2 | Material | B = Brass / S = Stainless steel |
| 3 | Mounting | P = Panel mount (back of board) |
| 4 | Contacts arrangement in normal position | CO = no/nc arrangement (contacts closed/opened)<br>CC = nc arrangement (all contacts closed) |
| 5 | Number of contacts | 4 = standard contacts number |
| 6 | Control voltage | 24, 110 or 240 = standard voltages |
| 7 | Current | VAC or VDC |
| 8 | Lock portion symbol | FS (1) up to 3 characters / Q (1) up to 6 characters |

(1) **FS - Lock type** Up to 3 characters **Q - Lock type** Up to 6 characters

**Special construction available upon enquiry**

## Accessories

| | Product | Part number |
|---|---|---|
| | Flip Cap | FLIP-S |

## Contact Information

Castell Safety International Ltd.
The Castell Building
217 Kingsbury Road
London, England NW9 9PQ

t: +44 (0) 20 8200 1200
f: +44 (0) 20 8905 9378
e: uksales@castell.com

Castell Safety International Ltd.
Oskar-Jäger-Strasse 137
50825 Köln
Germany

t: +49 (0) 221 1649 794
f: +49 (0) 221 1649 795
e: vertrieb@castell.com

Castell Interlocks Inc.
Suite 800
150 N Michigan Avenue,
Chicago, Illinois 60601
USA

t: +1.312.360.1516
f: +1.312.268.5174
e: ussales@castell.com

Castell Safety China
Building 1, No. 123,
Lane 1165, Jindu Road,
Minhang District,
Shanghai 201108, China.

t: +86 21 61519023
f: +86 21 61519030
e: chinasales@castell.com

While every effort has been made to ensure the accuracy of the information provided, no liability can be taken for any errors or omission.
Castell Safety International Limited reserves the right to alter specifications and introduce improvements without prior notice.

# MSI

## Motion Sensing Interlock

User Manual - Original Language Version

MSI-FSB-F-CAT4-110A

The MSI is designed to control access to rotating machinery that has a run-down time. The MSI relies on the detection of motion via two sensors. Only when both sensors detect zero movement can the key be released. The MSI has been designed to provide the highest level of safety when installed as part of an access control system for dangerous machinery.

## Operation

The Castell MSI motion sensing interlocks are typically used for machine isolation in applications in order to protect the hazardous area from access while power is on.

### MSI movement sensing interlock

1. **Power is on, key is trapped. Red LED is illuminated.**

2. **Turn the key to OFF position. Once zero movement of a motor has been detected, a signal is sent to the the unit energising the solenoid. The green LED illuminates. Release the key by pushing the green button.**

3. **Key is released, power is off and the motor stands still.**

1. **While the power is on and a motor is running, the key is trapped in the MSI motor sensing interlock. A red LED is illuminated.**
2. **Turn the key to OFF position to switch the power off. A movement sensor in the MSI unit gives a signal to the solenoid once zero movement has been detected. This will illuminate a green LED. The key can now be released by pushing the green button. This key can be taken to unlock the access lock on the motor unit.**
3. **The motor stands still and power is off until the key is replaced in the MSI motor sensing unit.**

While every effort has been made to ensure the accuracy of the information provided, no liability can be taken for any errors or omission.
Castell Safety International Limited reserves the right to alter specifications and introduce improvements without prior notice.

## Usage

The MSI movement sensing interlock is designed to be part of a safety system and is used to switch off the power and detect zero motor movements before releasing a key which is then used to gain access to a hazardous area via an access interlock such as the AI or Salus.

The MSI movement sensing interlock is not designed for security purposes.

## Installation

The MSI movement sensing interlock should be mounted to a surface using suitable fasteners (please refer to drawing on page 4 for more details). The lock face should be sealed to the panel for ingress protection.

Cables should be connected to the switch in accordance with the applicable wiring diagrams. Ensure that the unit is bonded for earth continuity (please refer to drawing on page 5 for more installation details).

IMPORTANT:
The interlock should be mounted using anti-tamper fasteners to prevent unauthorised removal.

The MSI range of movement sensing interlocks must be installed by a competent and qualified person who has read and understood these instructions. Please retain this document in your technical file.

## Maintenance

Periodic visual checks should be carried out by the site manager / safety officer.
Do not lubricate lock barrel with oil or grease, use CK Dry Powder Graphite if necessary.

In case of defects beeing detected please contact your nearest Castell Support Department for further actions.
Please see Contact section for contact details.

While every effort has been made to ensure the accuracy of the information provided, no liability can be taken for any errors or omission.
Castell Safety International Limited reserves the right to alter specifications and introduce improvements without prior notice.

## Technical Data

| | |
|---|---|
| **Temperature** | Minimum: -5°C [23°F] |
| | Maximum: 55°C [131°F] |
| **Type of mounting** | Surface mount using suitable fasteners (please refer to drawing on page 4 for more details) |
| **Attachment** | Millimeters: 240mm(H) x 140mm(W) |
| | Inches: 9.45”(H) x 5.51”(W) |
| **Weight** | 5.0 kg |
| **Material** | Brass or Stainless steel lock portions, powder coated mild steel enclosure |
| **Standards** | EN60439-1 ,EN954 CAT 4 |
| **Cable Size** | M20 Gland x 2 |
| **IP Rating** | IP65, NEMA 4 enclosure |
| **Standards** | Standstill detection components to UL |
| **Contact Rating** | Continuous, unattended, remote |
| **Use** | Engine switch, circuit-breaker or control switch |
| **Voltage** | 24 VDC and 240 VAC, 120 VAC |
| **Max Motor Voltage** | 600V |
| **Max Power Consumption** | 20VA / 18W |

## Application

The MSI is designed to operate as part of an integrated safety system, controlling access to hazardous areas to motor driven, high risk applications where complete isolation of the power supply is required before access is granted. Two sensors are positioned on the rotating shaft, these are wired into the MSI unit.

When the electric motor is running, the key of the MSI interlock cannot be removed, hence preventing access to the hazardous area. To gain access to the area, the electrical motor must be switched off by turning the key to OFF position. This changes the switches of the electrical supply to the machine to a safe condition. A movement sensing detector sends a signal to the MSI unit once a zero movement of the motor has been stated. A green LED illuminates. By pushing the green button, the key can now be removed and taken by the personnell to the AI access interlock.

The guard can only be opened when the electrical supply has been switched into a safe condition.The machine cannot be restarted until the door is closed and the key is removed and taken to the MSI movement sensing interlock.

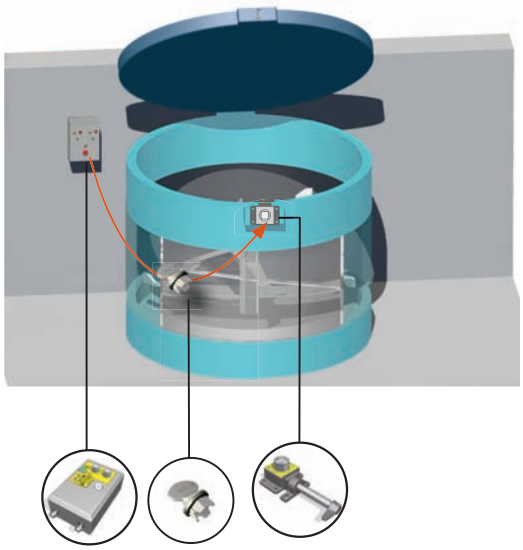

## EC-Declaration

We, the manufacturers, declare that the components, detailed herein and placed on the market, comply with all the essential health and safety requirements applying to them.

Empowered signatory:

Mr T.C. Whelan
Managing Director

While every effort has been made to ensure the accuracy of the information provided, no liability can be taken for any errors or omission.
Castell Safety International Limited reserves the right to alter specifications and introduce improvements without prior notice.

## Drawing

Dimensions:
**in mm**

***Note:*** *For safe mounting, use security screws*

MSI

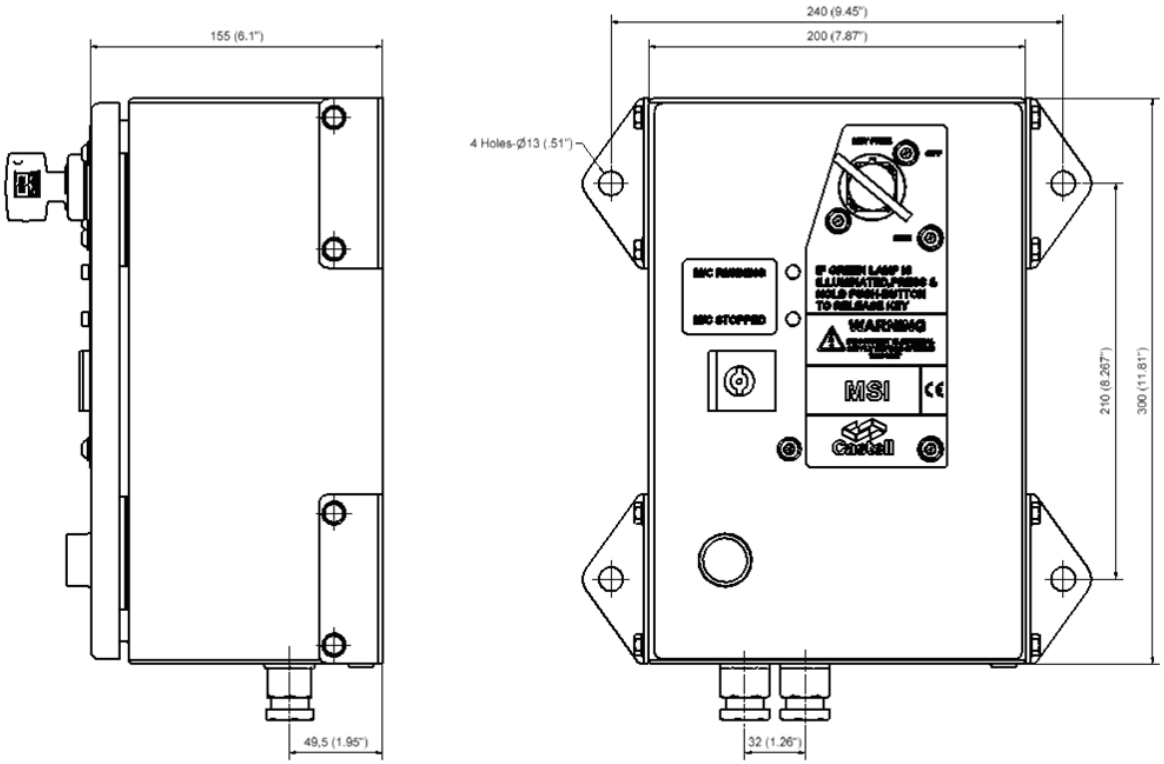


While every effort has been made to ensure the accuracy of the information provided, no liability can be taken for any errors or omission.
Castell Safety International Limited reserves the right to alter specifications and introduce improvements without prior notice.

## Wiring Diagram

MSI

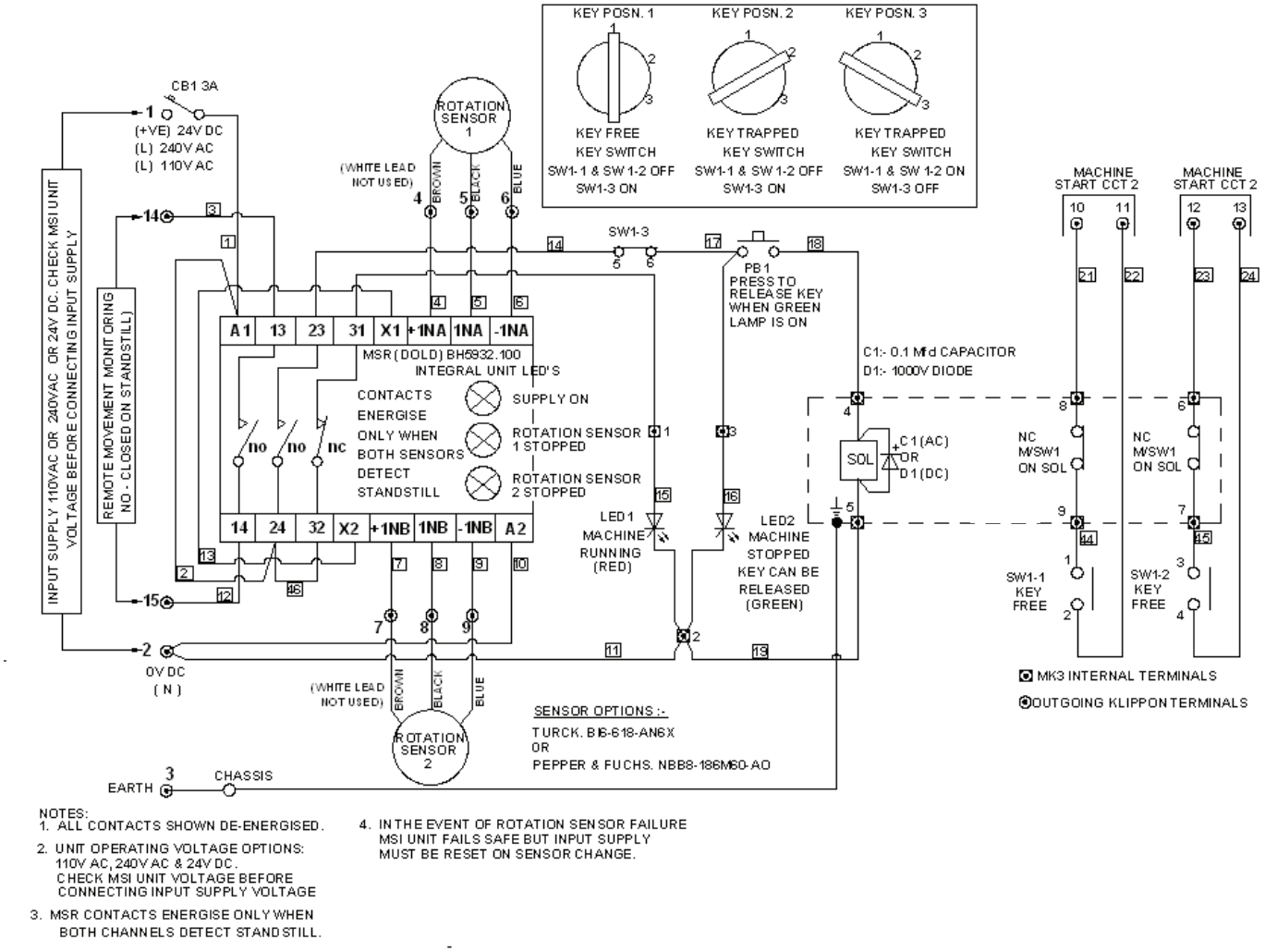


NOTES:
1. ALL CONTACTS SHOWN DE-ENERGISED.
2. UNIT OPERATING VOLTAGE OPTIONS: 110V AC, 240V AC & 24V DC. CHECK MSI UNIT VOLTAGE BEFORE CONNECTING INPUT SUPPLY VOLTAGE
3. MSR CONTACTS ENERGISE ONLY WHEN BOTH CHANNELS DETECT STANDSTILL.
4. IN THE EVENT OF ROTATION SENSOR FAILURE MSI UNIT FAILS SAFE BUT INPUT SUPPLY MUST BE RESET ON SENSOR CHANGE.

While every effort has been made to ensure the accuracy of the information provided, no liability can be taken for any errors or omission.
Castell Safety International Limited reserves the right to alter specifications and introduce improvements without prior notice.

## Order Information

| | Product Type | 1 | 2 | 3 | 4* | 5 | 6 | 7 |
|---|---|---|---|---|---|---|---|---|
| Part Number | MSI | | | | | | | |
| Example | MSI | FS | B | F | 1S | CAT4 | 110 | A |

| 8 |
|---|
| ABC |

| | | |
|---|---|---|
| 1 | **Lock portion type** | FS (1) / Q (1) |
| 2 | **Material** | B = Brass (standard) |
| 3 | **Mounting** | F = Front of board mount, with enclosure (standard) |
| 4* | **Secondary lock portion(s)**<br>Secondary lock portions are provided for personnel keys, primary lock posrtion for the isolation key | 1S / 2S = 1 or 2 secondary lock portions respectively |
| 5 | **Category** | CAT2 / CAT3 / CAT4 |
| 6 | **Control voltage** | 110 / 24 / 240 (standard) |
| 7 | **Current** | AC (use for 110V and 240V) / DC (use for 24V) |
| 8 | **Lock portion symbol** | FS (1) up to 3 characters / Q (1) up to 6 characters |

(1) **FS - Lock type** Up to 3 characters **Q - Lock type** Up to 6 characters

**Special construction available upon enquiry**

## Accessories

| | Product | Part number |
|---|---|---|
| | Flip Cap | FLIP-S |

## Contact Information

Castell Safety International Ltd.
The Castell Building
217 Kingsbury Road
London, England NW9 9PQ

t: +44 (0) 20 8200 1200
f: +44 (0) 20 8905 9378
e: uksales@castell.com

Castell Safety International Ltd.
Oskar-Jäger-Strasse 137
50825 Köln
Germany

t: +49 (0) 221 1649 794
f: +49 (0) 221 1649 795
e: vertrieb@castell.com

Castell Interlocks Inc.
Suite 800
150 N Michigan Avenue,
Chicago, Illinois 60601
USA

t: +1.312.360.1516
f: +1.312.268.5174
e: ussales@castell.com

Castell Safety China
Building 1, No. 123,
Lane 1165, Jindu Road,
Minhang District,
Shanghai 201108, China.

t: +86 21 61519023
f: +86 21 61519030
e: chinasales@castell.com

While every effort has been made to ensure the accuracy of the information provided, no liability can be taken for any errors or omission.
Castell Safety International Limited reserves the right to alter specifications and introduce improvements without prior notice.

# Olympus

# Heavy Duty Solenoid Controlled Access Lock

User Manual - Original Language Version

OLYM-S24D-C24D

The Olympus 4HD is a heavy duty solenoid controlled access lock available with either a stainless steel tongue actuator or a heavy duty handle. The Olympus 4HD is capable of supporting Category 4 safety systems through its 2n/c 1n/o contacts and is ideal for all types of hinging or sliding access points with a good tolerance for misaligned guarding. The unit is locked by the solenoid when it is de-energized and opened when energized. A mechanical key override facility for the solenoid comes standard. The Olympus 4HD is ideal for use on production cells and automated production and assembly lines where fast access is required.

## Operation

The Castell Olympus Solenoid controlled access lock is typically used for machine isolation in applications where a machine has to finish a cycle prior to isolation.

**OLYMPUS Heavy Duty Solenoid Controlled Access Lock**

1. **Tongue actuator is trapped. No LEDs are lit.**

2. **An external signal energises the solenoid. The yellow LED illuminates. Retract the tongue actuator.**

3. **Solenoid is energised and tongue actuator is released. Red and yellow LEDs are lit.**

1. **While the power is on and the machine is running, the solenoid, which controls the tongue, is de-energised. This traps the tongue in the OLYMPUS unit.**
2. **To open the guard the machine is instructed to stop via control circuit. On stopping a signal is sent to the solenoid in the OLYMPUS unit. With the solenoid energised, the tongue actuator can be retracted to break the contacts ensuring the machine cannot restart.**
3. **With the tongue released the machine area can be accessed. The machine cannot restart until the tongue actuator is re-inserted and the contacts closed.**

The OLYMPUS heavy duty solenoid controlled lock is available either with a stainless steel tongue actuator or heavy duty handle.

The OLYMPUS is available with different control and solenoid voltages (see order information on page 6 for more details).

While every effort has been made to ensure the accuracy of the information provided, no liability can be taken for any errors or omission.
Castell Safety International Limited reserves the right to alter specifications and introduce improvements without prior notice.

## Usage

The OLYMPUS solenoid controlled access lock is designed to be part of a safety system and is typically used as an access lock combined with machine isolation function in applications where a machine has to finish a cycle prior to isolation through the tongue actuator.

The OLYMPUS solenoid controlled access lock is not designed for security purposes.

## Installation

OLYMPUS units should be mounted to a flat surface using suitable fasteners (please refer to drawing on page 4 for more details). The lock face should be sealed to the panel for ingress protection.

Cables should be connected to the switch in accordance with the applicable wiring diagrams. Ensure that the unit is bonded for earth continuity (see drawing on page 4 for more installation details).

IMPORTANT:
The interlock should be mounted using anti-tamper fasteners to prevent unauthorised removal.

The OLYMPUS range of solenoid controlled access lockes must be installed by a competent and qualified person who has read and understood these instructions. Please retain this document in your technical file.

## Maintenance

Periodic visual checks should be carried out by the site manager / safety officer.

In case of defects beeing detected please contact your nearest Castell Support Department for further actions. Please see Contact section for contact details.

While every effort has been made to ensure the accuracy of the information provided, no liability can be taken for any errors or omission.
Castell Safety International Limited reserves the right to alter specifications and introduce improvements without prior notice.

## Technical Data

| | |
|---|---|
| **Temperature rating** | Minimum: -5°C [23°F], Maximum: +40°C [104°F]* |
| **Type of mounting** | Panel mount using suitable fasteners (please refer to drawing on page 4 for more details) |
| **Weight** | 4,0 kg |
| **Material** | Zinc alloy, stainless steel tongue* |
| **Paint Finish** | Gloss polyester power coat on passivated base material* |
| **Ingress Protection** | IP67 (DIN 400050)* |
| **MTTFd** | high > 385 years (31.250)* |

* Source: Fortress Interlcoks data sheet, document number: A_DS_E_LOK_V1.1_DEC09

## Application

A typical application of OLYMPUS solenoid controleld access lock is machine guarding. It is usually connected to power isolators via safety relays.

When the machine is in operation the access door is locked via the de-energized solenoid in the OLYMPUS solenoid controlled access lock. To open the guard, the machine is instructed to stop via the control circuit. Once the machine has completed the cycle, an external signal is received by the solenoid. Retracting the tongue actuator will breake the contacts ensuring the power is locked out.

The machine cannot be restarted until the door is closed and the tongue actuator is replaced in the OLYMPUS solenoid controlled access lock.

OLYMPUS
Solenoid Controleld Access Lock

## EC-Declaration

We, the manufacturers, declare that the components, detailed herein and placed on the market, comply with all the essential health and safety requirements applying to them.

Empowered signatory:

Mr T.C. Whelan
Managing Director

While every effort has been made to ensure the accuracy of the information provided, no liability can be taken for any errors or omission.
Castell Safety International Limited reserves the right to alter specifications and introduce improvements without prior notice.

## Drawing*

Dimensions*:
**in mm**

***Note:*** *For safe mounting, use security screws*

OLYMPUS

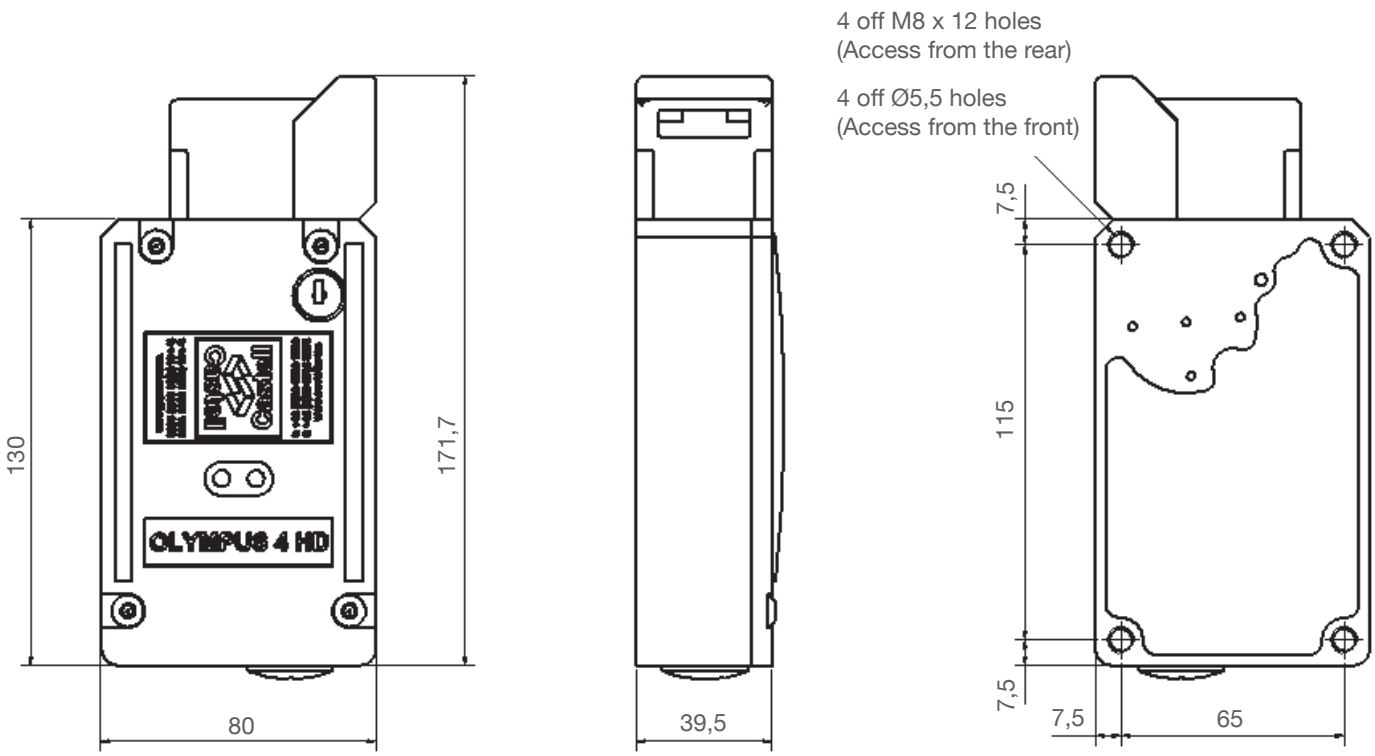


* Source: Fortress Interlocks Data Sheet, Document Number: A_DS_E_LOK_V1.1_DEC09

While every effort has been made to ensure the accuracy of the information provided, no liability can be taken for any errors or omission.
Castell Safety International Limited reserves the right to alter specifications and introduce improvements without prior notice.

## Wiring Diagram

***Note:*** *For safe mounting, use security screws*

OLYMPUS

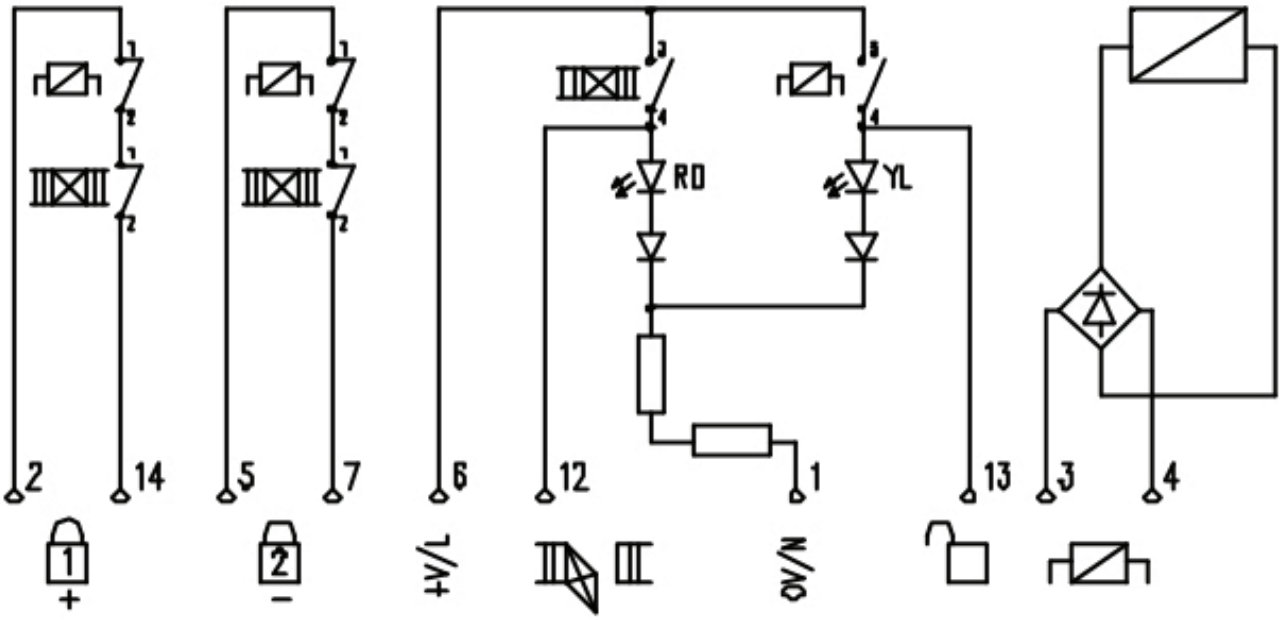


* Source: Fortress Interlocks Data Sheet, Document Number: A_DS_E_LOK_V1.1_DEC09

While every effort has been made to ensure the accuracy of the information provided, no liability can be taken for any errors or omission.
Castell Safety International Limited reserves the right to alter specifications and introduce improvements without prior notice.

## Order Information

| | Product Type | | 1 | 2 | | 3 | 4 |
|---|---|---|---|---|---|---|---|
| Part Number | OLYM | - S | | | - | | |
| Example | OLYM | - S | 24 | D | - C | 24 | D |

| | | |
|---|---|---|
| 1 | Solenoid Voltage | 24 / 48 / 110 / 240 V |
| 2 | Solenoid Current | D = DC / A = AC |
| 3 | Conrol Voltage | 24 / 48 / 110 / 240 V |
| 5 | Control Current | D = DC / A = AC |

**Special construction available upon enquiry**

## Contact Information

Castell Safety International Ltd.
The Castell Building
217 Kingsbury Road
London, England NW9 9PQ

t: +44 (0) 20 8200 1200
f: +44 (0) 20 8905 9378
e: uksales@castell.com

Castell Safety International Ltd.
Oskar-Jäger-Strasse 137
50825 Köln
Germany

t: +49 (0) 221 1649 794
f: +49 (0) 221 1649 795
e: vertrieb@castell.com

Castell Interlocks Inc.
Suite 800
150 N Michigan Avenue,
Chicago, Illinois 60601
USA

t: +1.312.360.1516
f: +1.312.268.5174
e: ussales@castell.com

Castell Safety China
Building 1, No. 123,
Lane 1165, Jindu Road,
Minhang District,
Shanghai 201108, China.

t: +86 21 61519023
f: +86 21 61519030
e: chinasales@castell.com

While every effort has been made to ensure the accuracy of the information provided, no liability can be taken for any errors or omission.
Castell Safety International Limited reserves the right to alter specifications and introduce improvements without prior notice.

# Salus

## Automatic Access Interlock

User Manual - Original Language Version

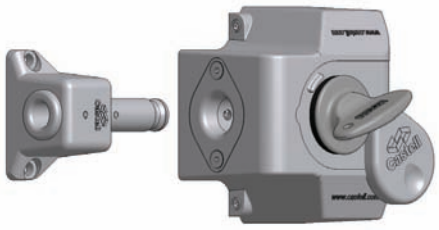

SALUS-S-1

The Salus is a single key automatic access interlock for use on hinged or sliding doors. The interlock is available in both left and right hinged and sliding door configurations. The unit is manufactured in stainless steel, making it ideal for use in harsh and corrosive environments and for heavy use. Typical industries using the Salus are food, chemical, mining, steel and pharmaceutical.

## Operation

The Castell single key access interlocks are used in various applications to control part body access to hazardous areas.

### SALUS access interlock, hand 1, hinged door operation

① **Key is free, bolt is trapped in the lock**

② **Insert and turn key, to release bolt**

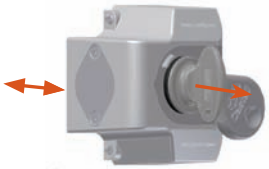

③ **Key is trapped, bolt is released**

1. **While the key is free, the bolt of the Salus access interlock is trapped in the mechanism. The hinged door is locked.**
2. **By inserting and turning the key in the access interlock, you can release the bolt. This will trap the key in the lock.**
3. **The key stays trapped while the bolt is released.**

### SALUS access interlock, hand 1, sliding door operation

① **Key is free, bolt is trapped in the lock**

② **Insert and turn key, to release bolt**

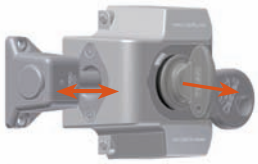

③ **Key is trapped, bolt is released**

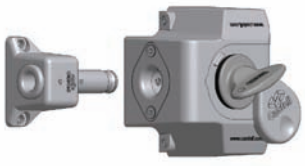

1. **While the key is free, the bolt of the Salus access interlcock is trapped in the mechanism. The sliding door is locked.**
2. **By inserting and turning the key in the access interlock, you can release the bolt. This will trap the key in the lock.**
3. **The key stays trapped while the bolt is released.**

While every effort has been made to ensure the accuracy of the information provided, no liability can be taken for any errors or omission.
Castell Safety International Limited reserves the right to alter specifications and introduce improvements without prior notice.

## Usage

The Salus automatic access interlock should be used as a part of a safety system to allow safe access to potentially hazardous and dangerous areas.

The Salus interlock is not designed for security purposes, such as a safe or external access to buildings.

The Salus interlock has been tested to vibration, in accordance with BS EN 50155:2001 & IEC 61373:1999-01 up to a maximum of 150Hz). If the unit is to be subjected to vibration levels higher than this, then anti vibration pads should be used.

No hazardous substances were used in the manufacture of this product. The product can be disposed of in standard waste.

## Installation

The mounting bracket should be mounted on the static frame or the door. The mounting should be positioned so that bolt engagement is made before the door touches the frame. The Salus unit is then presented to the mounting plate at an angle and clipped on by engagement with the internal tangs. Once the unit is clipped on, the two dog screws are tightened (using the security bit supplied), trapping the mounting plate and securing the unit for use. The bolt should then be aligned and mounted, using suitable fasteners. The design of the bolt allows for some misalignment to the housing. Please refer to drawing on page 4 for more installation details.

IMPORTANT:
The interlock should be mounted using anti-tamper fasteners to prevent unauthorised removal.

The Salus access interlock must be installed by a competent and qualified person who has read and understood these instructions. Please retain this document in your technical file.

## Maintenance

Periodic visual checks should be carried out by the site manager / safety officer.
Do not lubricate lock barrel with oil or grease, use CK Dry Powder Graphite if necessary.

In case of detected defects please contact your nearest Castell Support Department for further actions.
Please see Contact section for contact details.

While every effort has been made to ensure the accuracy of the information provided, no liability can be taken for any errors or omission.
Castell Safety International Limited reserves the right to alter specifications and introduce improvements without prior notice.

## Technical Data

| | |
|---|---|
| **Temperature rating** | Minimum: -40°C [-40°F] ice free |
| | Maximum: 75°C [167°F] |
| **Type of mounting** | Surface mount using suitable fasteners (please refer to drawing on page 4 for more details) |
| **Weight** | 1.4kg |
| **Material** | Stainless steel |
| **MTTF Certification** | Available on request |

## Application

A typical application of the Salus single key automatic access interlock is machine guarding with part body access.

The Salus is used as a part of a safety system, which ensures a machine is shut down, before access to the hazardous area is allowed.

The system involves the Salus20 key switch that breaks the machine safety circuit when the key is removed. The key can then be taken to the Salus automatic access interlock to enable access to the machine.

The machine cannot be restarted until the door is closed, the bolt is trapped in the Salus lock and the key is removed and taken to the Salus20 key switch.

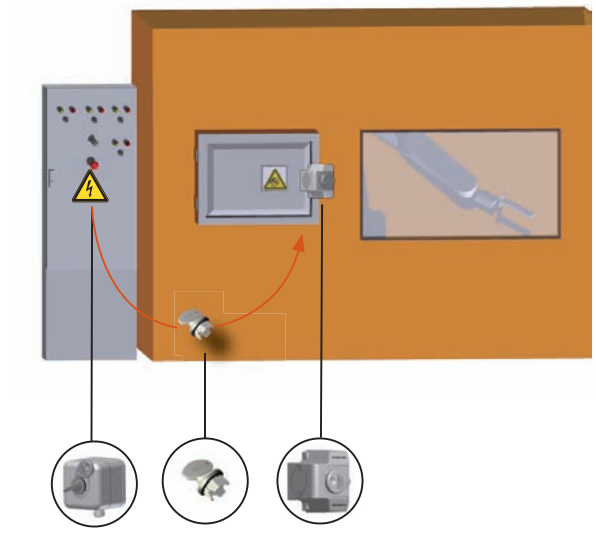


## EC-Declaration

We, the manufacturers, declare that the components, detailed herein and placed on the market, comply with all the essential health and safety requirements applying to them.

Empowered signatory:

Mr T.C. Whelan
Managing Director

While every effort has been made to ensure the accuracy of the information provided, no liability can be taken for any errors or omission.
Castell Safety International Limited reserves the right to alter specifications and introduce improvements without prior notice.

## Drawing

Dimensions:
**in mm**

***Note:*** *For safe mounting, use security screws*

### SALUS, Hand 1, hinged door operation

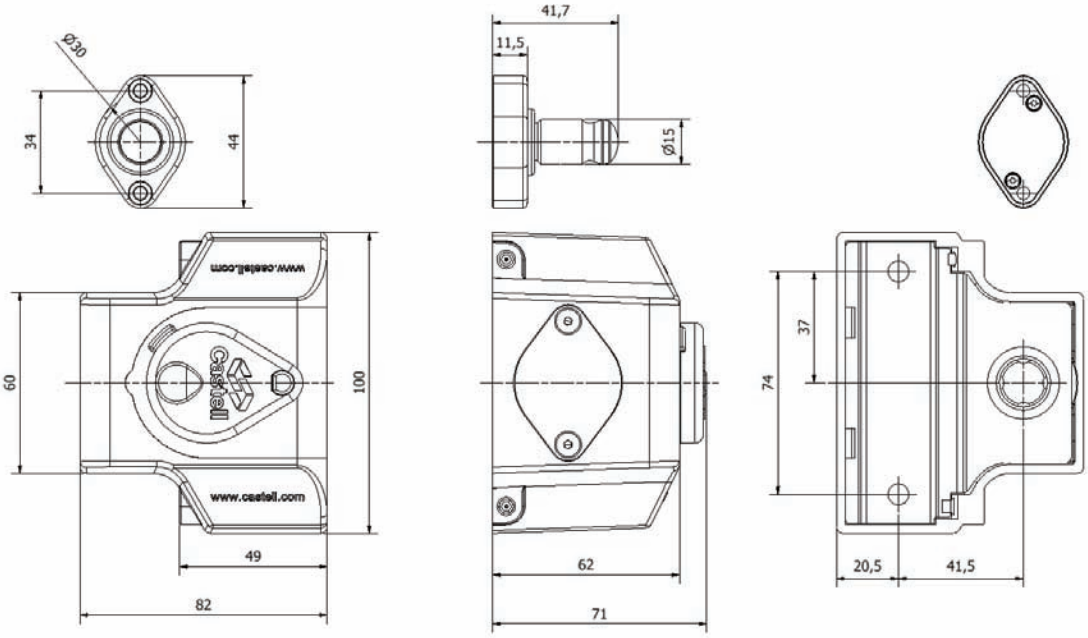


### SALUS, Hand 1, sliding door operation

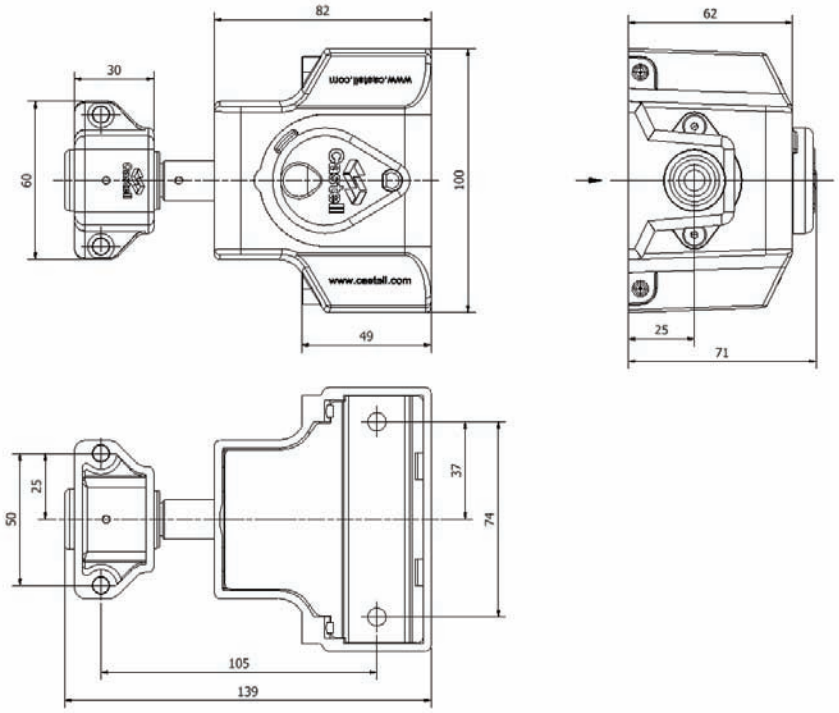


While every effort has been made to ensure the accuracy of the information provided, no liability can be taken for any errors or omission.
Castell Safety International Limited reserves the right to alter specifications and introduce improvements without prior notice.

## Order Information

| | Product Type | | 1 | | 2 |
|---|---|---|---|---|---|
| Part Number | SALUS | - | | - | |
| Example | SALUS | - | S | - | 1 |

3
ABC

| | | |
|---|---|---|
| 1 | Operation | H = Hinged Door Operation (1)<br>S = Sliding Door Operation (1) |
| 2 | Handing | 1 = left hinged door (bolt enters left) (2)<br>2 = right hinged door (bolt enters right) (2) |
| 3 | Lock portion symbol | up to 3 characters |

(1) Hinged Door Operation

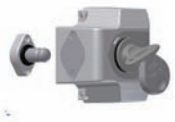

Sliding Door Operation

(2) Hand 1 Hand 2

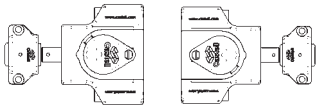

**Individual construction upon enquiry**

## Contact Information

Castell Safety International Ltd.
The Castell Building
217 Kingsbury Road
London, England NW9 9PQ

t: +44 (0) 20 8200 1200
f: +44 (0) 20 8905 9378
e: uksales@castell.com

Castell Safety International Ltd.
Oskar-Jäger-Strasse 137
50825 Köln
Germany

t: +49 (0) 221 1649 794
f: +49 (0) 221 1649 795
e: vertrieb@castell.com

Castell Interlocks Inc.
Suite 865, 8th Floor
150 North Michigan
Chicago, IL 60601
USA

t: +1 312 360 1516
f: +1 312 268 5174
e: ussales@castell.com

Castell Safety China
Building 1, No. 123,
Lane 1165, Jindu Road,
Minhang District,
Shanghai 201108, China.

t: +86 21 61519023
f: +86 21 61519030
e: chinasales@castell.com

While every effort has been made to ensure the accuracy of the information provided, no liability can be taken for any errors or omission.
Castell Safety International Limited reserves the right to alter specifications and introduce improvements without prior notice.

# Salus20

## Key Isolator Switch

User Manual - Original Language Version

SALUS20

The Salus20 is a trapped key isolation switch capable of switching up to 20 amps. It combines an integrated flush mounted lock with sliding lock cover in a stainless steel sealed enclosure. The stainless steel housing has an ergonomic design that means the Salus20 has no potential areas for dirt to collect and trap. The Salus20 is suitable for wash down environments. The Salus20 is also fitted with stainless steel glands further enhancing its suitability for harsh or corrosive environments and heavy use. Typical industries using the Salus20 are food, chemical, mining, steel and pharmaceutical.

## Operation

The Castell Salus range is used in various applications to control access to hazardous areas, especially in harsh or corrosive environments.

### Salus20

1. **Key is trapped, power is on.**

2. **Turn and remove key to change the switch condition and switch the power off.**

3. **Key is removed, power is off.**

1. **While the power is on and machine is running, the key is trapped in the Salus key switch.**
2. **By turning and removing the key, the power will be shut off by changing the switch contacts in the Salus20.**
3. **The key can be taken to gain acces to machine area via a door interlock.**

While every effort has been made to ensure the accuracy of the information provided, no liability can be taken for any errors or omission.
Castell Safety International Limited reserves the right to alter specifications and introduce improvements without prior notice.

## Usage

The Salus20 is designed to be part of a safety system and is used to isolate the power releasing a key which is then used to gain access to a hazardous area via an access interlock such as the Salus.

The Salus20 isolator key switch is not designed for security purposes or for switching loads greater than 20 amps.

No hazardous substances were used in the manufacture of this product. The product can be disposed of in standard waste.

## Installation

The housing of the Salus20 should normally be mounted to a surface using suitable fasteners to fix the mounting bracket (see drawing on page 4 for more installation details).

The Salus20 key isolator switch must be installed by a competent and qualified person who has read and understood these instructions. Please retain this document in your technical file.

## Maintenance

Periodic visual checks should be carried out by the site manager / safety officer.
Do not lubricate lock barrel with oil or grease, use CK Dry Powder Graphite if necessary.

In case of defects being detected please contact your nearest Castell Support Department for further actions.
Please see Contact section for contact details.

While every effort has been made to ensure the accuracy of the information provided, no liability can be taken for any errors or omission.
Castell Safety International Limited reserves the right to alter specifications and introduce improvements without prior notice.

## Technical Data

| | |
|---|---|
| **Temperature rating** | Minimum: -5°C [23°F] ice free |
| | Maximum: 55°C [131°F] |
| **Type of mounting** | Surface mount using suitable fasteners (please refer to drawing on page 4 for more details). Fixings provided with the unit. |
| **Weight** | 1,4 kg |
| **Material** | Stainless steel |
| **MTTF Certification** | Available on request |

## Application

A typical application of Salus20 isolator key switch is machine guarding. It is usually used in combination with an access interlock such as the Salus for part body access or an acces interlock with an exchange key for full body access control.

The Salus20 breaks the machine safety circuit, ensuring a machine is shut down when the key is turned and removed. The key can then be taken to the Salus automatic access interlock to enable access to the machine.

The machine cannot be restarted until the door is closed, the bolt is trapped in the access interlock and the key is removed and taken to the Salus20 key isolator switch.

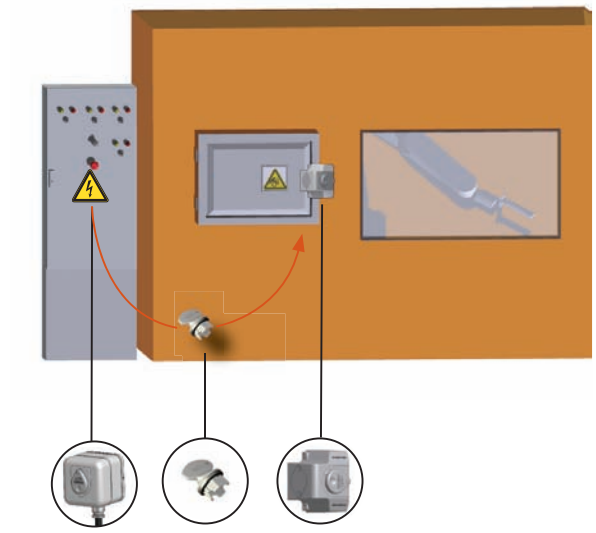


## EC-Declaration

We, the manufacturers, declare that the components, detailed herein and placed on the market, comply with all the essential health and safety requirements applying to them.

Empowered signatory:

Mr T.C. Whelan
Managing Director

While every effort has been made to ensure the accuracy of the information provided, no liability can be taken for any errors or omission.
Castell Safety International Limited reserves the right to alter specifications and introduce improvements without prior notice.

## Drawing

Dimensions:
**in mm**

***Note:*** *For safe mounting, use security screws*

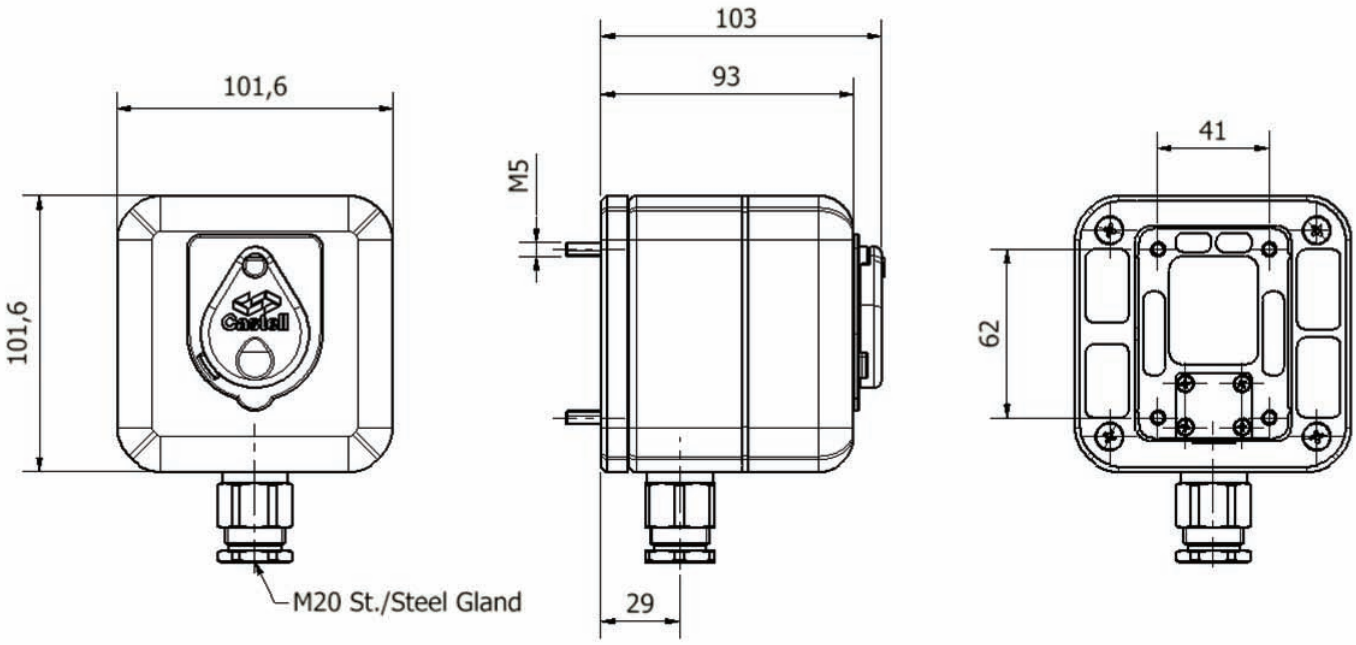


While every effort has been made to ensure the accuracy of the information provided, no liability can be taken for any errors or omission.
Castell Safety International Limited reserves the right to alter specifications and introduce improvements without prior notice.

## Wiring Diagram

***Note:*** *For safe mounting, use security screws*

Key Free, Switch off

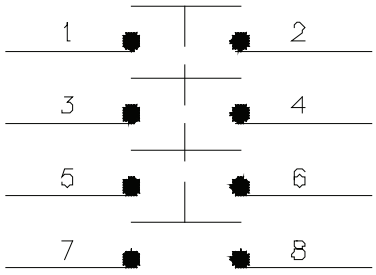


Key Free, 2 NO/2NC

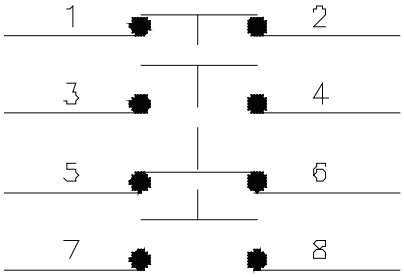


While every effort has been made to ensure the accuracy of the information provided, no liability can be taken for any errors or omission.
Castell Safety International Limited reserves the right to alter specifications and introduce improvements without prior notice.

## Order Information

| | Product Type | | 1 |
|---|---|---|---|
| Part Number | SALUS20 | - | |
| Example | SALUS20 | - | C/O4 |

| 2 |
|---|
| ABC |

| | | |
|---|---|---|
| 1 | Contacts arrangement | C/O4 = 2 NO/2 NC<br>CC4 = 4NC |
| 2 | Lock portion symbol | Please advise (up to 3 characters) |

**Special construction available upon enquiry**

## Contact Information

Castell Safety International Ltd.
The Castell Building
217 Kingsbury Road
London, England NW9 9PQ

t: +44 (0) 20 8200 1200
f: +44 (0) 20 8905 9378
e: uksales@castell.com

Castell Safety International Ltd.
Oskar-Jäger-Strasse 137
50825 Köln
Germany

t: +49 (0) 221 1649 794
f: +49 (0) 221 1649 795
e: vertrieb@castell.com

Castell Interlocks Inc.
Suite 800
150 N Michigan Avenue,
Chicago, Illinois 60601
USA

t: +1.312.360.1516
f: +1.312.268.5174
e: ussales@castell.com

Castell Safety China
Building 1, No. 123,
Lane 1165, Jindu Road,
Minhang District,
Shanghai 201108, China.

t: +86 21 61519023
f: +86 21 61519030
e: chinasales@castell.com

While every effort has been made to ensure the accuracy of the information provided, no liability can be taken for any errors or omission.
Castell Safety International Limited reserves the right to alter specifications and introduce improvements without prior notice.

# TDI

## Electronic Time Delay Isolator

User Manual - Original Language Version

TDI-FSB-F-1S-N/O6-110A

The TDI electronic time delay isolator is a heavy duty trapped key interlock switch controlled by a fail-safe timer and solenoid. The TDI unit is designed to control access to hazardous machines with run down times and can be used in high risk applications. It incorporates a dual channel fail-safe timer, a heavy duty continuously rated solenoid, solenoid position monitoring, a 20A isolation switch, a front panel lamp indication of solenoid position and a timer failure with one or more lock portions for multiple access applications.

## Operation

The Castell TDI electronic time delay isolator is typically used for machine isolation in applications in order to protect the hazardous area from access while power is on.

### TDI electronic time delay isolator

1. **Power is on, keys are trapped. Red LED is illuminated.**
2. **Turn the knob to OFF position, switching the power off. Once the timer is complete, the green LED illuminates. Release the keys by pushing the green button.**
3. **Keys are released, power is off.**

1. **While the power is on, all keys are trapped in the TDI unit. The red LED is illuminated.**
2. **Turn the switch to OFF position to switch the power off. The TDI timer starts running. Once complete, the green LED illuminates. All keys can now be released by pushing the green button. The keys can be taken to unlock the access locks, which protect the motor or machine area.**
3. **The power is off until all keys are replaced in the TDI electronic timer and the power knob turned back to the ON position.**

The TDI is available with different solenoid voltages as AC or DC: 24, 110 or 240 V (see order information on page 6 for more details).

The TDI comes with 6 contacts as standard with contacts arrangements as 3NO/3NC, but auxiliary set of contacts are available on request.

While every effort has been made to ensure the accuracy of the information provided, no liability can be taken for any errors or omission.
Castell Safety International Limited reserves the right to alter specifications and introduce improvements without prior notice.

## Usage

The TDI electronic time delay isolator is designed to be part of a safety system and is used to switch off the power and a pre-set time (set to be longer than the run-down time of the machine) has elapsed before releasing a key or a set of keys which is then used to gain access to a hazardous area via an access interlock such as the AI or Salus.

The TDI electronic time delay isolator is not designed for security purposes.

## Installation

The TDI electronic time delay isolator should be mounted to a surface using suitable fasteners (please refer to drawing on page 4 for more details). The lock face should be sealed to the panel for ingress protection.

Cables should be connected to the switch in accordance with the applicable wiring diagrams. Ensure that the unit is bonded for earth continuity (please refer to drawing on page 4 for more installation details).

IMPORTANT:
The interlock should be mounted using anti-tamper fasteners to prevent unauthorised removal.

The TDI range of electronic timer with power isolations must be installed by a competent and qualified person who has read and understood these instructions. Please retain this document in your technical file.

## Maintenance

Periodic visual checks should be carried out by the site manager / safety officer.
Do not lubricate lock barrel with oil or grease, use CK Dry Powder Graphite if necessary.

In case of defects beeing detected please contact your nearest Castell Support Department for further actions.
Please see Contact section for contact details.

While every effort has been made to ensure the accuracy of the information provided, no liability can be taken for any errors or omission.
Castell Safety International Limited reserves the right to alter specifications and introduce improvements without prior notice.

## Technical Data

| | |
|---|---|
| **Temperature** | Minimum: -5°C [23°F] |
| | Maximum: 55°C [131°F] |
| **Type of mounting** | Surface mount using suitable fasteners (please refer to drawing on page 4 for more details) |
| **Weight** | 5 kg |
| **Material** | Brass or Stainless steel lock portions, powder coated mild steel enclosure |
| **Cable Size** | M20 Gland x 2 |
| **IP Rating** | IP65, NEMA 4 enclosure |
| **Standards** | UL508 |
| **Voltage** | 24 VDC and 240 VAC, 110 VAC |

## Application

The TDI is designed to operate as part of an integrated safety system, controlling access to hazardous areas to motor driven, high risk applications where a certain rundown time is required before access is granted.

When the machine is running, the key of the TDI interlock cannot be removed, preventing access to the hazardous area. To gain access to the machine area, the electrical supply must be switched off by turning the switch to OFF position. When the machine stop sequence is initiated, a signal from the machine control circuits starts the internal timer. After a pre-set time (which must exceed the machine run down time), the timer energizes the solenoid illuminating the green LED. By pushing the green button the key can be released from the TDI unit. This key is taken by the personnell to the AIE access interlock.

The machine cannot be restarted until the door is locked closed and the key is returned to the TDI electronic timer.

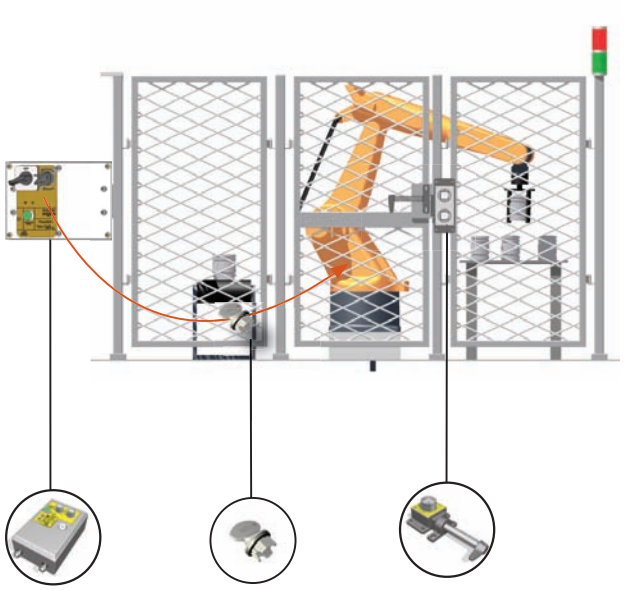

## EC-Declaration

We, the manufacturers, declare that the components, detailed herein and placed on the market, comply with all the essential health and safety requirements applying to them.

Empowered signatory:

Mr T.C. Whelan
Managing Director

While every effort has been made to ensure the accuracy of the information provided, no liability can be taken for any errors or omission.
Castell Safety International Limited reserves the right to alter specifications and introduce improvements without prior notice.

## Drawing

Dimensions:
**in mm**

***Note:*** *For safe mounting, use security screws*

TDI

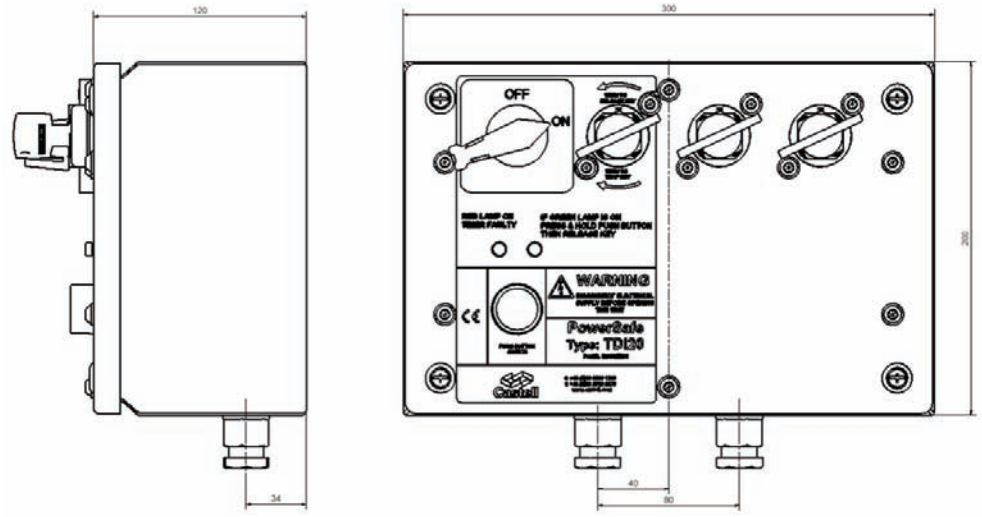


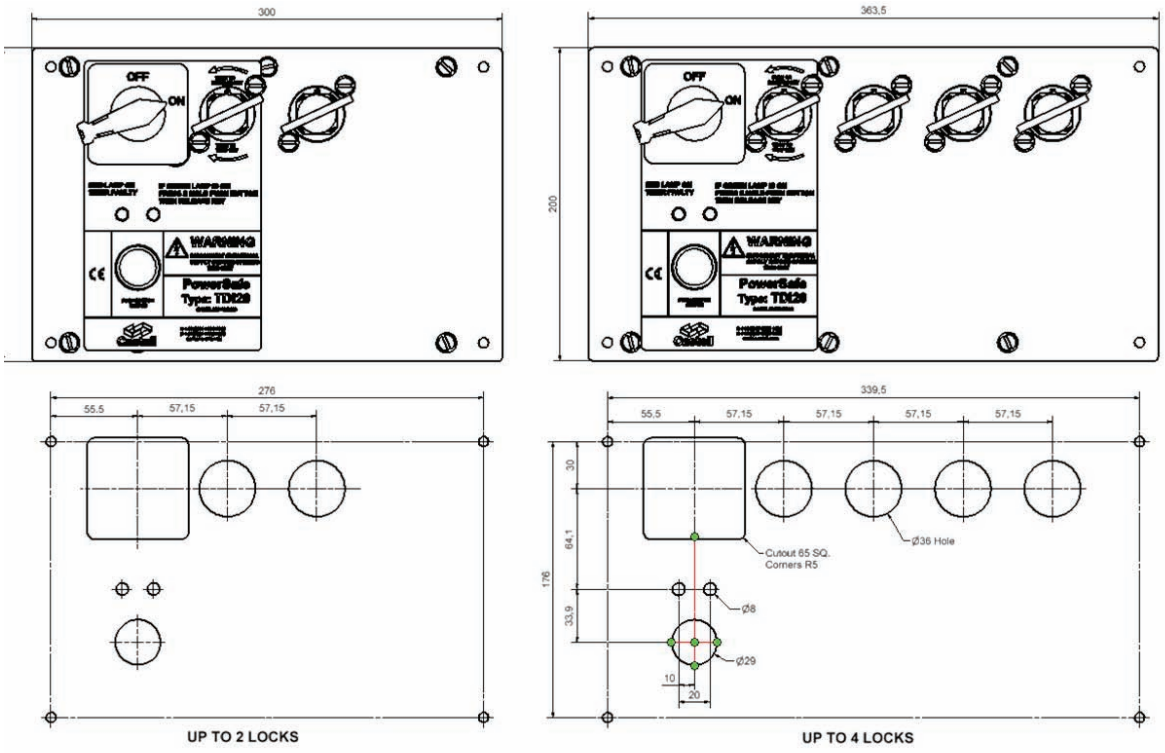


BACK OF BOARD (B.O.B)

While every effort has been made to ensure the accuracy of the information provided, no liability can be taken for any errors or omission.
Castell Safety International Limited reserves the right to alter specifications and introduce improvements without prior notice.

## Wiring Diagram

1. MACHINE CYCLE RUNNING, PRIMARY KEY TRAPPED, SOLENOID DE-ENERGISED.

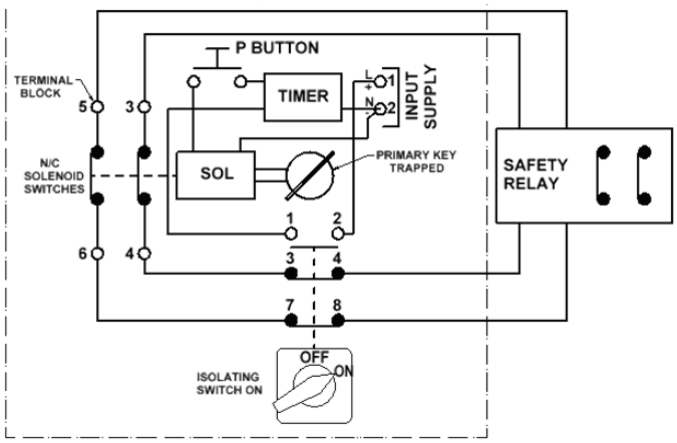


2. SWITCH OFF, ISOLATING SWITCH MACHINE RUNDOWN STARTED, TIMER ENERGISED.

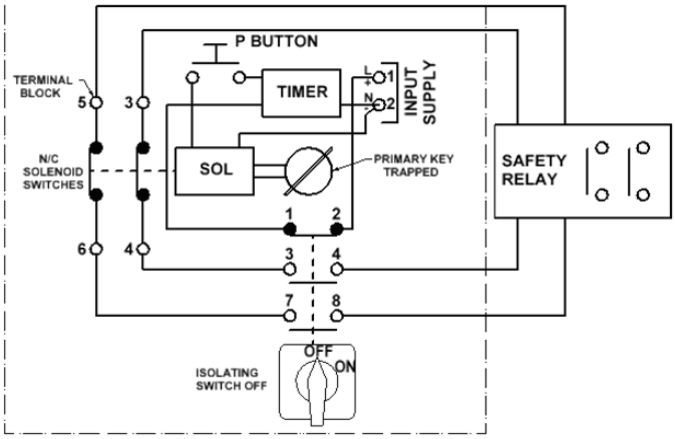


3. TIME DELAY IS FINISHED, PRESS PUSH BUTTON TO ENERGISE SOLENOID, TURN KEY ACW TO RELEASE.

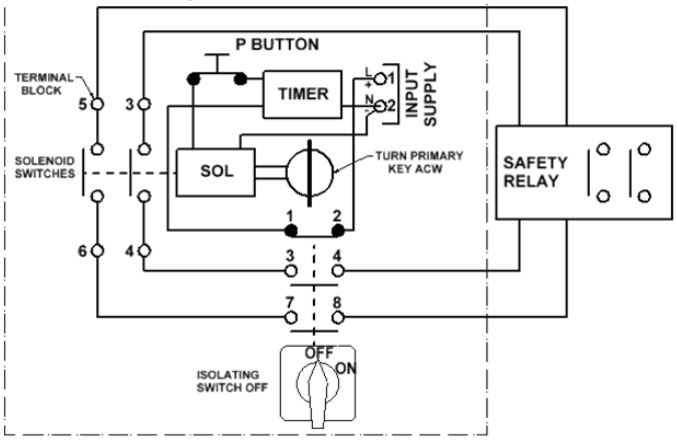


4. KEY IS RELEASED, MACHINE IS ISOLATED, SOLENOID DE-ENERGISED.

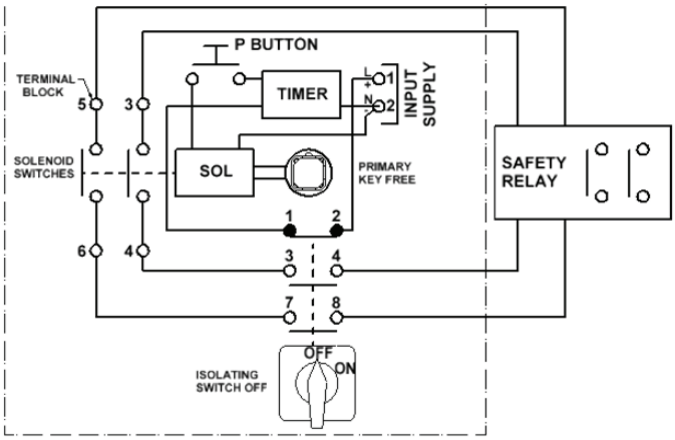


While every effort has been made to ensure the accuracy of the information provided, no liability can be taken for any errors or omission.
Castell Safety International Limited reserves the right to alter specifications and introduce improvements without prior notice.

## Order Information

| | Product Type | 1 | 2 | 3 | 4 | 5 | 6 | 7 | 8 |
|---|---|---|---|---|---|---|---|---|---|
| Part Number | TDI | | | | | | | | |
| Example | TDI | FS | B | F | 1 | E | N/O6 | 110 | A |

**9**
- A1 — **Isolation Key Symbol** (exchange key condition)
- OR
- **Primary Key Symbol** (double key condition)

**10**
- B1 — **Personnel Key Symbol** (exchange key condition)
- OR
- **Secondary Key Symbol** (double key condition)

| | | |
|---|---|---|
| **1** | **Lock portion type** | FS (1) / Q (1) |
| **2** | **Material** | B = Brass / S = Stainless steel |
| **3** | **Mounting** | F = Front of board mount, with enclosure (standard)<br>P = Panel mount |
| **4** | **Secondary (additional) lock portion(s)** | 1 / 2 / 3 etc. secondary lock portions available |
| **5** | **Key condition** | S = for secodary lock portions, if simultaneous removal of all keys required<br>E = for secondary lock portions, if exchange key version required |
| **6** | **Contacts arrangement in normal position (standard)** | N/O6 = 6 contacts, 3no/3nc arrangement (standard) |
| **7** | **Control voltage** | 110 / 24 / 240 (standard) |
| **8** | **Current** | VAC / VDC |
| **9** | **Lock portion symbol:**<br>Isolation key (for exchange key condition) **or**<br>Primary key (for double key condition) | FS (1) up to 3 characters / Q (1) up to 6 characters |
| **10** | **Lock portion symbol:**<br>Personnel key (for exchange key condition) **or**<br>Secondary key (for double key condition) | FS (1) up to 3 characters / Q (1) up to 6 characters |

(1) **FS - Lock type** Up to 3 characters **Q - Lock type** Up to 6 characters

**Special construction available upon enquiry**

## Contact Information

Castell Safety International Ltd.
The Castell Building
217 Kingsbury Road
London, England NW9 9PQ

t: +44 (0) 20 8200 1200
f: +44 (0) 20 8905 9378
e: uksales@castell.com

Castell Safety International Ltd.
Oskar-Jäger-Strasse 137
50825 Köln
Germany

t: +49 (0) 221 1649 794
f: +49 (0) 221 1649 795
e: vertrieb@castell.com

Castell Interlocks Inc.
Suite 800
150 N Michigan Avenue,
Chicago, Illinois 60601
USA

t: +1.312.360.1516
f: +1.312.268.5174
e: ussales@castell.com

Castell Safety China
Building 1, No. 123,
Lane 1165, Jindu Road,
Minhang District,
Shanghai 201108, China.

t: +86 21 61519023
f: +86 21 61519030
e: chinasales@castell.com

While every effort has been made to ensure the accuracy of the information provided, no liability can be taken for any errors or omission.
Castell Safety International Limited reserves the right to alter specifications and introduce improvements without prior notice.

# TDR

## Time Delay Remote Unit with Electrical Isolation

User Manual - Original Language Version

TDR-FSS-F-1E-N/O6-110A

The TDR time delay remote unit is a heavy duty trapped key interlock switch controlled by a fail-safe timer and solenoid. The unit is designed to control access to hazardous machines with run down times and can be used in high risk applications. The unit incorporates a dual channel fail-safe timer, heavy duty continuously rated solenoid, solenoid position monitoring, 20A electrical switch, front panel lamp indication of solenoid position and timer failure with up to four lock centers for multiple access applications.

## Operation

The Castell TDR time delay remote unit with electrical isolation is typically used for machine isolation in applications in order to protect the hazardous area from access while power is on.

**TDR electronic time delay remote unit with electrical isolation**

1. **Power is on, keys are trapped. Red LED is illuminated.**
2. **Turning off the power, a timer starts, the green LED illuminates. Release the key by pushing the green button.**
3. **Key is released, power is off.**

1. **While the power is on, the key is trapped in the TDR timer with electrical isolation. A red LED is illuminated.**
2. **When the machine stop sequence is initiated, a signal from the machine control circuits starts the timer in the TDR unit. Once completed, the timer energizes the solenoid illuminating the green LED. By pushing the green button the keys can be released. These keys are taken by the personnell to the machine area.**
3. **The machine cannot be restarted until all keys are replaced and trapped in the TDR time delay remote unit.**

The TDR is available with different solenoid voltages as AC or DC: 24, 110 or 240 V (see order information on page 7 for more details).

The TDR comes with 6 contacts as standard with contacts arrangements as 3NO/3NC, but auxiliary set of contacts are available on request.

While every effort has been made to ensure the accuracy of the information provided, no liability can be taken for any errors or omission.
Castell Safety International Limited reserves the right to alter specifications and introduce improvements without prior notice.

## Usage

The TDR time delay remote unit with electrical isolation is designed to be part of a safety system and is used to switch off the power. The TDR waits for a signal from the machine which starts the time delay countdown, before releasing a key, which is then used to gain access to a hazardous area via an access interlock such as the AI, AIE or Salus.

The TDR time delay remote unit with electrical isolation is not designed for security purposes.

No hazardous substances were used in the manufacture of this product. The product can be disposed of in standard waste.

## Installation

The TDR time delay remote unit with electrical isolation should be mounted to a surface using suitable fasteners (please refer to drawing on page 4-5 for more details). The lock face should be sealed to the panel for ingress protection.

Cables should be connected to the switch in accordance with the applicable wiring diagrams. Ensure that the unit is bonded for earth continuity (please refer to drawing on page 6 for more details).

IMPORTANT:
The interlock should be mounted using anti-tamper fasteners to prevent unauthorised removal.

The TDR range of electronic timer with electrical isolations must be installed by a competent and qualified person who has read and understood these instructions. Please retain this document in your technical file.

## Maintenance

Periodic visual checks should be carried out by the site manager / safety officer.
Do not lubricate lock barrel with oil or grease, use CK Dry Powder Graphite if necessary.

In case of defects beeing detected please contact your nearest Castell Support Department for further actions.
Please see Contact section for contact details.

While every effort has been made to ensure the accuracy of the information provided, no liability can be taken for any errors or omission.
Castell Safety International Limited reserves the right to alter specifications and introduce improvements without prior notice.

## Technical Data

| | |
|---|---|
| **Temperature** | Minimum: -5°C [23°F] |
| | Maximum: 55°C [131°F] |
| **Type of mounting** | Surface mount using suitable fasteners (please refer to drawing on page 4-5 for more details) |
| **Weight** | 5 kg |
| **Material** | Brass or Stainless steel lock portions, powder coated mild steel enclosure |
| **Cable Size** | M20 Gland x 2 |
| **Voltage** | 24 VDC and 240 VAC, 110 VAC |
| **Max Motor Voltage** | 600V |
| **Max Power Consumption** | 20VA / 18W |

## Application

The TDR is designed to operate as part of an integrated safety system, controlling access to hazardous areas to motor driven, high risk applications where a certain time rundown is required before access is granted.
While machine is running, the keys are trapped in the TDR interlock, preventing access to the machine area. To gain access to the area, the electrical supply must be switched off via the machine control panel. When the machine stop sequence is initiated, a signal from the machine control circuits starts the internal timer. After a pre-set time (which must exceed the machine run down time), the timer energizes the solenoid illuminating the green LED. By pushing the green button the keys can be released. These keys are taken by the personnell to the AIE access interlocks on the doors.
The machine cannot be restarted until all doors are locked closed and all keys returned to the TDR electronic timer.

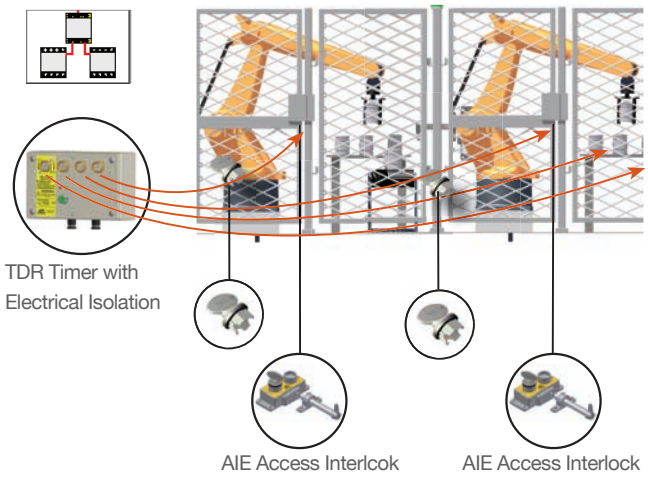


## EC-Declaration

We, the manufacturers, declare that the components, detailed herein and placed on the market, comply with all the essential health and safety requirements applying to them.

Empowered signatory:

Mr T.C. Whelan
Managing Director

While every effort has been made to ensure the accuracy of the information provided, no liability can be taken for any errors or omission.
Castell Safety International Limited reserves the right to alter specifications and introduce improvements without prior notice.

## Drawing

Dimensions:
**in mm**

***Note:*** *For safe mounting, use security screws*

TDR, surface mount/enclosure version (FOB = front on board)

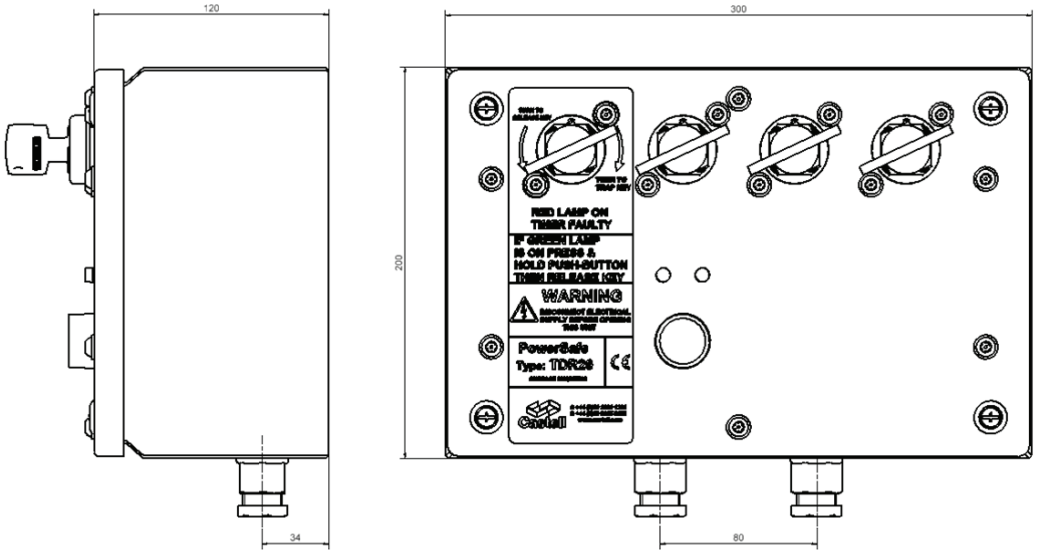


TDR, panel mount (BOB = back on board)

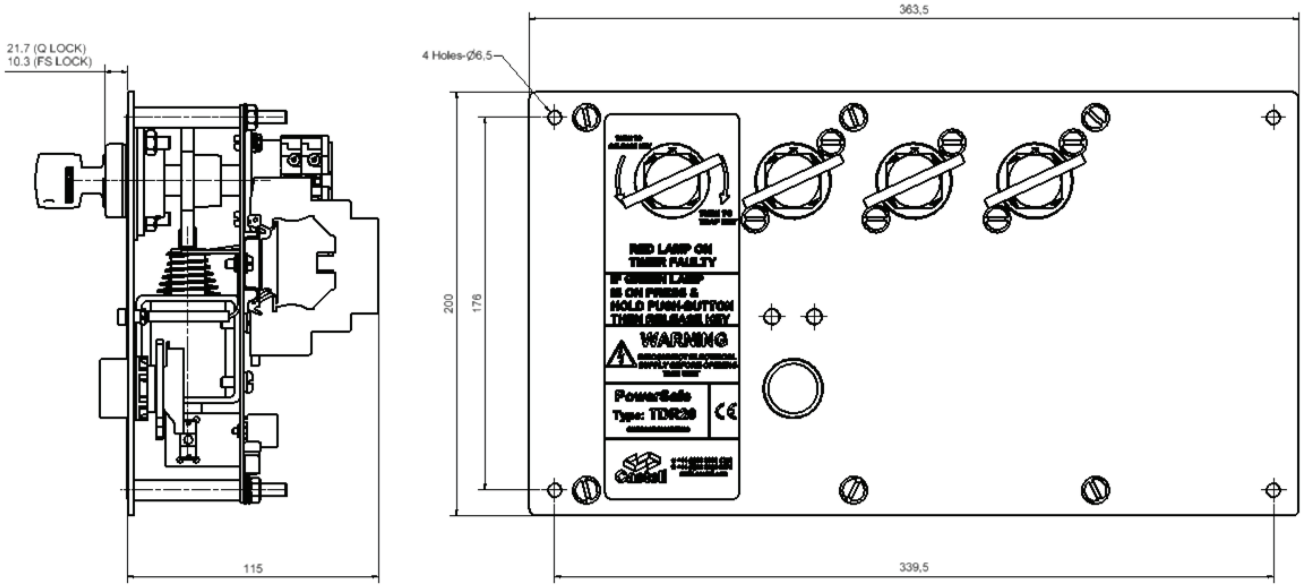


While every effort has been made to ensure the accuracy of the information provided, no liability can be taken for any errors or omission.
Castell Safety International Limited reserves the right to alter specifications and introduce improvements without prior notice.

## Drawing

Dimensions:
**in mm**

***Note:*** *For safe mounting, use security screws*

TDR, surface mount/enclosure version (FOB = front on board)

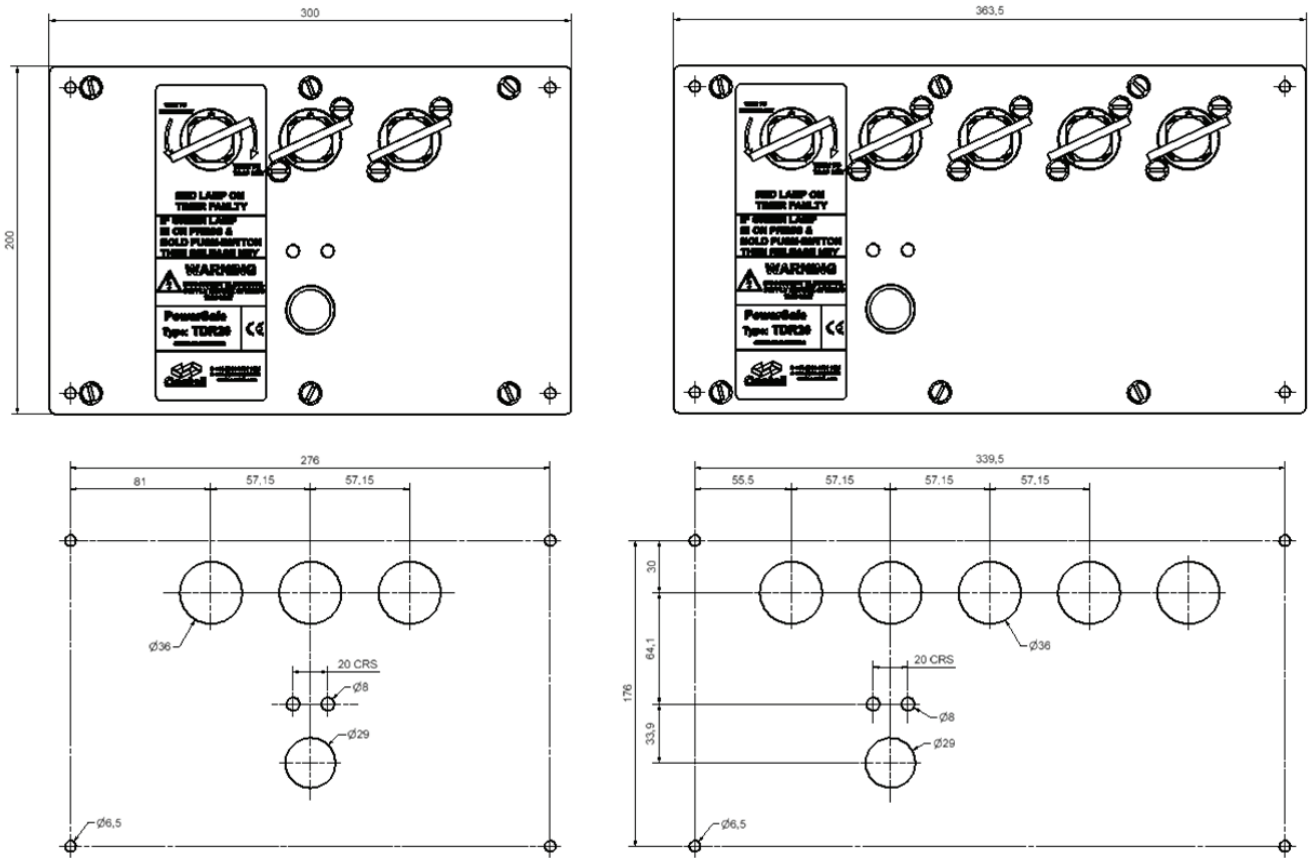


While every effort has been made to ensure the accuracy of the information provided, no liability can be taken for any errors or omission.
Castell Safety International Limited reserves the right to alter specifications and introduce improvements without prior notice.

## Wiring Diagram

TDR

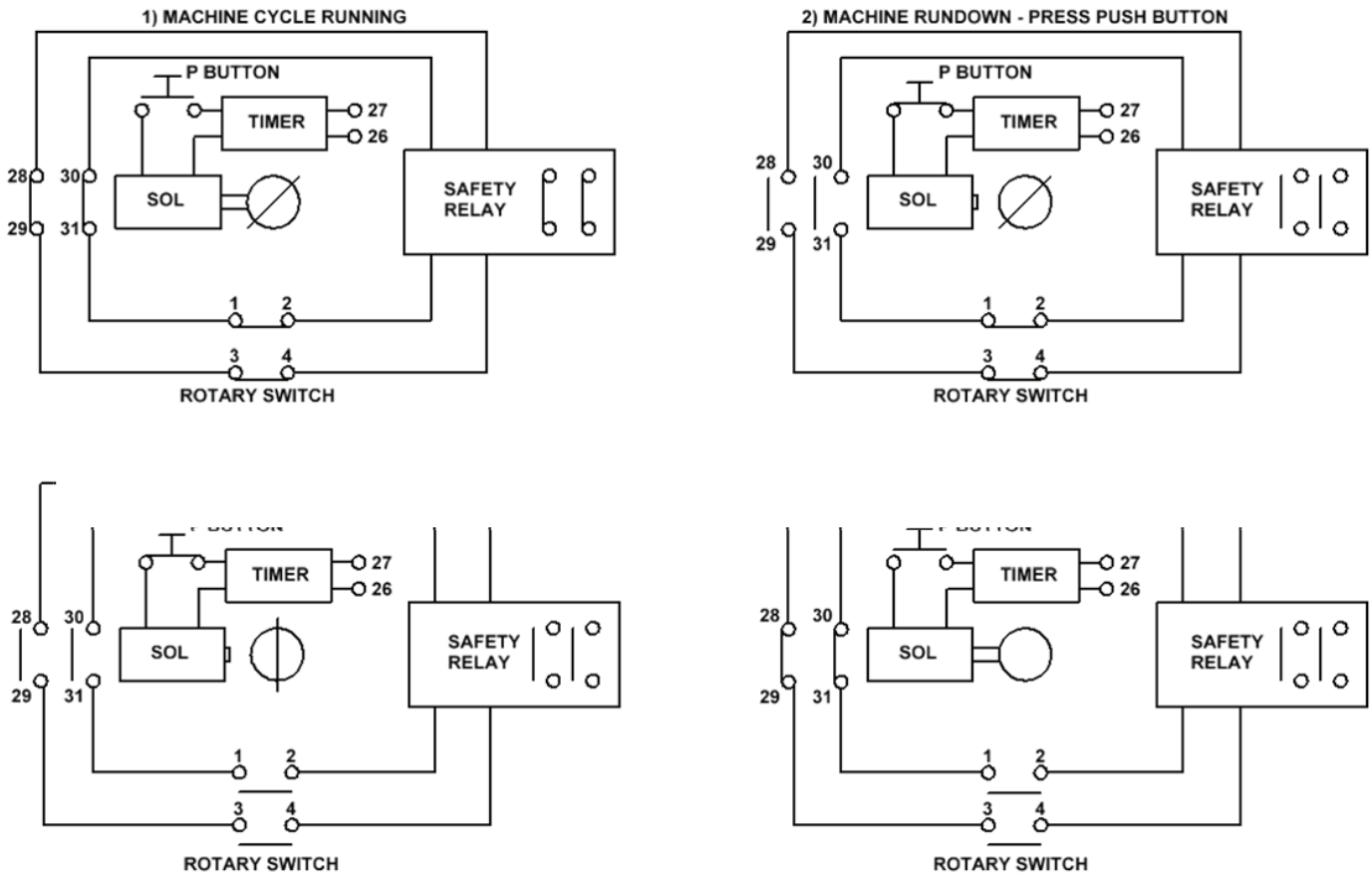


While every effort has been made to ensure the accuracy of the information provided, no liability can be taken for any errors or omission.
Castell Safety International Limited reserves the right to alter specifications and introduce improvements without prior notice.

## Order Information

| | Product Type | 1 | 2 | 3 | 4 | 5 | 6 | 7 | 8 |
|---|---|---|---|---|---|---|---|---|---|
| Part Number | TDR | | | | | | | | |
| Example | TDR | FS | B | F | 1 | E | N/O6 | 110 | A |

**9**
- A1 — **Isolation Key Symbol** (exchange key condition)
- OR
- (blank) — **Primary Key Symbol** (double key condition)

**10**
- B1 — **Personnel Key Symbol** (exchange key condition)
- OR
- (blank) — **Secondary Key Symbol** (double key condition)

| | | |
|---|---|---|
| **1** | **Lock portion type** | FS (1) / Q (1) |
| **2** | **Material** | B = Brass / S = Stainless steel |
| **3** | **Mounting** | F = Front of board mount, with enclosure (standard) |
| **4** | **Secondary (additional) lock portion(s)** | 1 = 1 secondary lock portion available as standard version |
| **5** | **Key condition** | D = Double key version / S = secodary keys as for exchange key version |
| **6** | **Contacts arrangement in normal position (standard)** | N/O6 = 6 contacts, 3NO/3NC arrangement (standard) |
| **7** | **Control voltage** | 110 / 24 / 240 (standard) |
| **8** | **Current** | VAC / VDC |
| **9** | **Lock portion symbol:**<br>Isolation key (for exchange key condition) **or**<br>Primary key (for double key condition) | FS (1) up to 3 characters / Q (1) up to 6 characters |
| **10** | **Lock portion symbol:**<br>Personnel key(s) (for exchange key condition) **or**<br>Secondary key(s) (for double key condition) | FS (1) up to 3 characters / Q (1) up to 6 characters |

(1) **FS - Lock type** Up to 3 characters

**Q - Lock type** Up to 6 characters

**Special construction available upon enquiry**

## Contact Information

Castell Safety International Ltd.
The Castell Building
217 Kingsbury Road
London, England NW9 9PQ

t: +44 (0) 20 8200 1200
f: +44 (0) 20 8905 9378
e: uksales@castell.com

Castell Safety International Ltd.
Oskar-Jäger-Strasse 137
50825 Köln
Germany

t: +49 (0) 221 1649 794
f: +49 (0) 221 1649 795
e: vertrieb@castell.com

Castell Interlocks Inc.
Suite 800
150 N Michigan Avenue,
Chicago, Illinois 60601
USA

t: +1.312.360.1516
f: +1.312.268.5174
e: ussales@castell.com

Castell Safety China
Building 1, No. 123,
Lane 1165, Jindu Road,
Minhang District,
Shanghai 201108, China.

t: +86 21 61519023
f: +86 21 61519030
e: chinasales@castell.com

While every effort has been made to ensure the accuracy of the information provided, no liability can be taken for any errors or omission.
Castell Safety International Limited reserves the right to alter specifications and introduce improvements without prior notice.

# Key Selector Box

User Manual - Original Language Version

X-FSB

The W key selector box is designed to enable the controlled release of keys by the positioning of a selector knob. It is typically used in switchgear applications ensuring multiple supplies are not applied to common bus bars. The W box is suitable for releasing any number of keys, in a pre-determined sequence in differing combinations. A maximum of six selector knob positions is available. The requirement for this type of product usually arises due to various system setups i.e. in the control of switchgear. The W box is supplied in an enclosure suitable for surface mounting.

## Operation

Castell W key selector boxes are used in switch gear applications to ensure multiple supplies are not applied to common bus bars.

**W key selector box, horizontal mount (5 keys)**

1. **Determine the required combination of trapped/released keys to operate the incomers and bus bars**
2. **Find the corresponding selector knob position in the truth table (containing all possible combinations pre-determined as per individual requirements)**
3. **Select the position of the selector knob (1-4) and release the required set of keys**

**W box front**

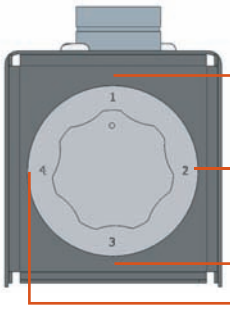


| | Inc 1 | Inc 2 | Inc 3 | Bus 1 | Bus 2 |
|---|---|---|---|---|---|
| 1 | F | F | F | T | T |
| 2 | T | F * | F * | F | T |
| 3 | F | T | F * | F* | T |
| 4 | F * | F | T | T | F |

**Selector Switch**

**F = free key**
**T = trapped key**
*** = key not returned between two neighbouring selections**

While every effort has been made to ensure the accuracy of the information provided, no liability can be taken for any errors or omission.
Castell Safety International Limited reserves the right to alter specifications and introduce improvements without prior notice.

## Usage

W key selector boxes should be used in switchgear applications to allow a safe access to potential hazardous and dangerous areas with one or more access points.

The W key selector box is not designed for security purposes, such as a safe or external access to a building.

No hazardous substances were used in the manufacture of this product. The product can be disposed of in standard waste.

## Installation

The W key selector box should normally be mounted on the static frame using suitable fasteners (please refer to drawing on page 4 for more details). The W key selector boxes are avalable in horizontal and vertical mounting versions. Anti vibration pads should be used on machines that generate a high level of vibration

IMPORTANT:
The W key selector box should be mounted using anti-tamper fasteners to prevent unauthorised removal.

The W key selector box must be installed by a competent and qualified person who has read and understood these instructions. Please retain this document in your technical file.

## Maintenance

Periodic visual checks should be carried out by the site manager/safety officer.
Do not lubricate lock barrel with oil or grease, use CK Dry Powder Graphite if necessary.

In case of defects being detected please contact your nearest Castell Support Department for further actions.
Please see Contact section for contact details.

While every effort has been made to ensure the accuracy of the information provided, no liability can be taken for any errors or omission.
Castell Safety International Limited reserves the right to alter specifications and introduce improvements without prior notice.

## Technical Data

| | |
|---|---|
| **Temperature rating** | Minimum: -40°C [-40°F] ice free for Q & FS type |
| | Maximum: 107°C [224,6°F] for Q type/140°C [284°F] for FS type or 288°C [550°F] upon request |
| **Type of mounting** | Surface mount using suitable fasteners (please refer to drawing on page 4 for more details) |
| **Weight** | Brass: 1 kg for 2 lock oprtions, add 0,5 kg per additional portion |
| | Stainless steel: 1 kg for 2 lock oprtions, add 0,5 kg per additional portion |
| **Material** | Brass or stainless steel |
| **MTTF Certification** | Available on request |

## Application

A typical application of the W key selector box is switchgear to ensure that multiple supplies are not applied to common bus bars.

In the application illustrated key I1 will operate incomer 1, key I2 will operate incomer 2 and key I3 will operate incomer 3. Key B1 operates bus coupler 1 while key B2 operates bus coupler 2. When the key is inserted, the corresponding switch is closed.

The system shown is in condition 1 (see table) and has the three incomer switches closed and the busbar switches open. To change the system to condition 2 the I1 key is returned to the selector box and the selector knob moved to condition 2. In this position, the B1 key can be removed and the B1 Busbar switch closed.

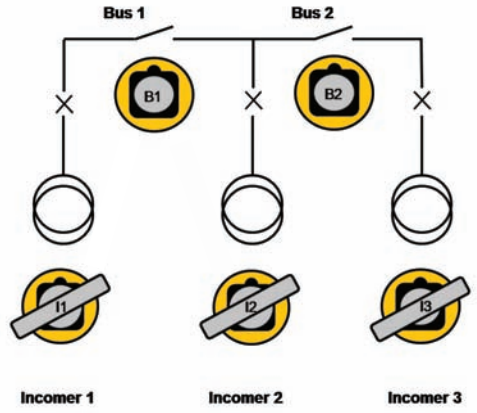


| | Inc 1 (I1) | Inc 2 (I2) | Inc 3 (I3) | Bus 1 (B1) | Bus 2 (B2) |
|---|---|---|---|---|---|
| 1 | F | F | F | T | T |
| 2 | T | F * | F * | F | T |
| 3 | F | T | F * | F* | T |
| 4 | F * | F | T | T | F |

**F = free key**
**T = trapped key**
*** = key not returned between two neighbouring selections**

## EC-Declaration

We, the manufacturers, declare that the components, detailed herein and placed on the market, comply with all the essential health and safety requirements applying to them.

Empowered signatory:

Mr T.C. Whelan
Managing Director

While every effort has been made to ensure the accuracy of the information provided, no liability can be taken for any errors or omission.
Castell Safety International Limited reserves the right to alter specifications and introduce improvements without prior notice.

## Drawing

Dimensions:
**in mm**

***Note:*** *For safe mounting, use security screws*

W key selector box, horizontal mount

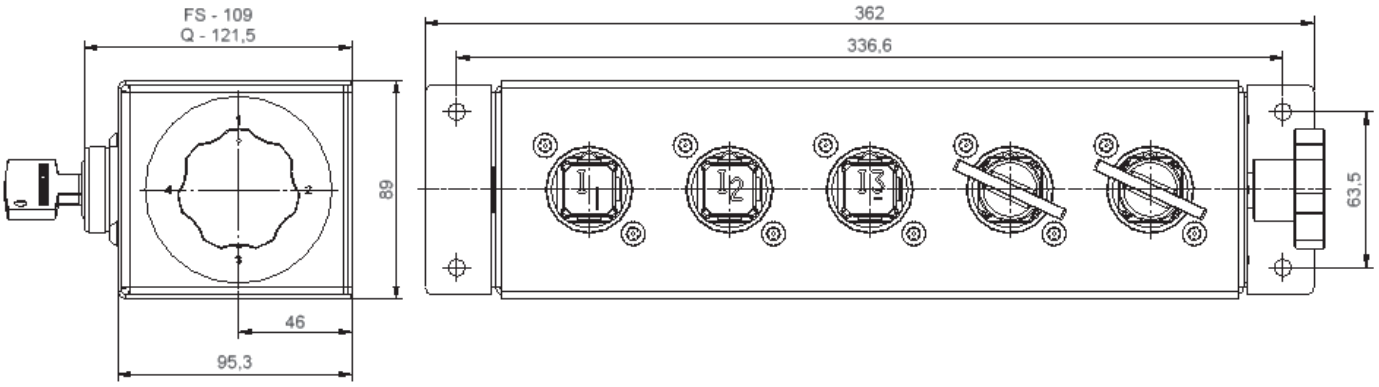


While every effort has been made to ensure the accuracy of the information provided, no liability can be taken for any errors or omission.
Castell Safety International Limited reserves the right to alter specifications and introduce improvements without prior notice.

## Order Information

| | Product Type | | 1 | 2 |
|---|---|---|---|---|
| Part Number | W | - | | |
| Example | W | - | FS | B |

| 3 | |
|---|---|
| | Truth Table |

| | | |
|---|---|---|
| 1 | **Lock portion type** | FS (1) / Q (1) |
| 2 | **Material** | B = Brass<br>S = Stainless steel |
| 3 | **Truth table: please provide or contact our technical support** | see example on page 1 |

(1) **FS - Lock type** Up to 3 characters **Q - Lock type** Up to 6 characters

## Accessories

**Special construction available upon enquiry**

| | Product | Part number |
|---|---|---|
| | Flip Cap | FLIP-S |

## Contact Information

Castell Safety International Ltd.
The Castell Building
217 Kingsbury Road
London, England NW9 9PQ

t: +44 (0) 20 8200 1200
f: +44 (0) 20 8905 9378
e: uksales@castell.com

Castell Safety International Ltd.
Oskar-Jäger-Strasse 137
50825 Köln
Germany

t: +49 (0) 221 1649 794
f: +49 (0) 221 1649 795
e: vertrieb@castell.com

Castell Interlocks Inc.
Suite 800
150 N Michigan Avenue,
Chicago, Illinois 60601
USA

t: +1.312.360.1516
f: +1.312.268.5174
e: ussales@castell.com

Castell Safety China
Building 1, No. 123,
Lane 1165, Jindu Road,
Minhang District,
Shanghai 201108, China.

t: +86 21 61519023
f: +86 21 61519030
e: chinasales@castell.com

While every effort has been made to ensure the accuracy of the information provided, no liability can be taken for any errors or omission.
Castell Safety International Limited reserves the right to alter specifications and introduce improvements without prior notice.

# Key Exchange Box

User Manual - Original Language Version

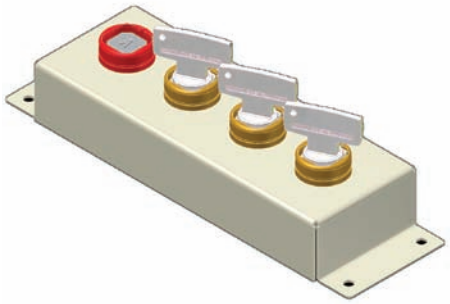

X-FSB-H-1/3

The X key exchange box is designed to enable the release of keys by the insertion of one or more primary key(s). The need for this type of product usually arises when there are multiple points of entry. The unit will generally be the link between the isolation locks and the access products. The product is supplied in an enclosure suitable for surface mounting and is available in a number of configurations and number of locks.

## Operation

Castell Key Exchange Boxes are used in various applications to control (multi-)door access(es) to hazardous areas.

### X key exchange box, horizontal mount

① **1 key is free, 3 keys are trapped.**

② **Insert and turn the free key, then turn and release the trapped keys in a sequence.**

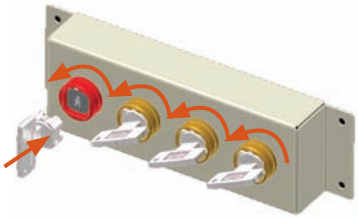

③ **1 key is trapped, 3 keys are released**

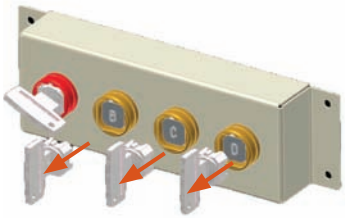

1. **While 1 key is free which is usually used in a power isolation, 3 keys are trapped.**
2. **By inserting and turning the free key in the X key exchange box, trapped keys can be sequentially released. The released keys can be used in the access door locks to gain access to the hazardous area.**
3. **The inserted key stays trapped until all released keys are returned to their original position.**

**The X key exchange box is available in different combinations of free and trapped keys and also in a vertical mounting version.**

While every effort has been made to ensure the accuracy of the information provided, no liability can be taken for any errors or omission.
Castell Safety International Limited reserves the right to alter specifications and introduce improvements without prior notice.

## Usage

X key exchange boxes should be used to allow a safe access to potential hazardous and dangerous areas with one or more access points.

The X key exchange box is not designed for security purposes, such as a safe or external access to a building.

No hazardous substances were used in the manufacture of this product. The product can be disposed of in standard waste.

## Installation

The X key exchange box should normally be mounted on the static frame using suitable fasteners. Please refer to the drawing on page 4 for maximum and minimum mounting distance and hole details. The X key exchange boxes are avalable in horizontal and vertical mounting versions. Anti vibration pads should be used on machines that generate a high level of vibration.

IMPORTANT:
The X key exchange box should be mounted using anti-tamper fasteners to prevent unauthorised removal.

The X key exchange box must be installed by a competent and qualified person who has read and understood these instructions. Please retain this document in your technical file.

## Maintenance

Periodic visual checks should be carried out by the site manager/safety officer.
Do not lubricate lock barrel with oil or grease, use CK Dry Powder Graphite if necessary.

In case of defects being detected please contact your nearest Castell Support Department for further actions.
Please see Contact section for contact details.

While every effort has been made to ensure the accuracy of the information provided, no liability can be taken for any errors or omission.
Castell Safety International Limited reserves the right to alter specifications and introduce improvements without prior notice.

## Technical Data

| | |
|---|---|
| **Temperature rating** | Minimum: -40°C [-40°F] ice free for Q & FS type |
| | Maximum: 107°C [224,6°F] for Q type/140°C [284°F] for FS type or 288°C [550°F] upon request |
| **Type of mounting** | Surface mount using suitable fasteners (please refer to drawing on page 4 for more details) |
| **Weight** | Brass: 1 kg for 2 lock oprtions, add 0,5 kg per additional portion |
| | Stainless steel: 1 kg for 2 lock oprtions, add 0,5 kg per additional portion |
| **Material** | Brass or stainless steel |
| **MTTF Certification** | Available on request |

## Application

A typical application of the X key exchange box is machine guarding with one or more access points to the hazardous area.

The key exchange box is used as a part of a safety system, which ensures a machine is shut down, before access to the hazardous area is allowed. The system involves a KS key switch for the electrical supply and typically more than one AIE access interlocks for full body access.

The removal of the isolation key from the key switch isolates the electrical supply to the machine. This key is taken to the X key exchange box to release the trapped keys. The released keys are used to gain access through the AIE door interlocks.

The machine cannot be restarted until all keys are returned to the key exchange box and the power isolation key is removed and taken to the KS key switch.

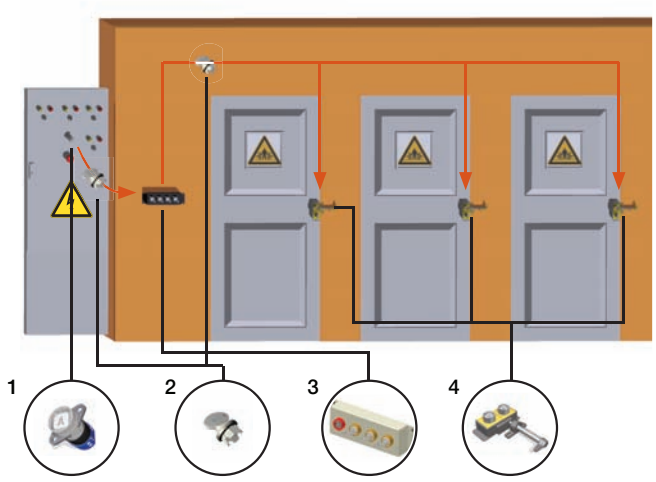


## EC-Declaration

We, the manufacturers, declare that the components, detailed herein and placed on the market, comply with all the essential health and safety requirements applying to them.

Empowered signatory:

Mr T.C. Whelan
Managing Director

While every effort has been made to ensure the accuracy of the information provided, no liability can be taken for any errors or omission.
Castell Safety International Limited reserves the right to alter specifications and introduce improvements without prior notice.

## Drawing

Dimensions:
**in mm**

***Note:*** *For safe mounting, use security screws*

X, horizontal mount

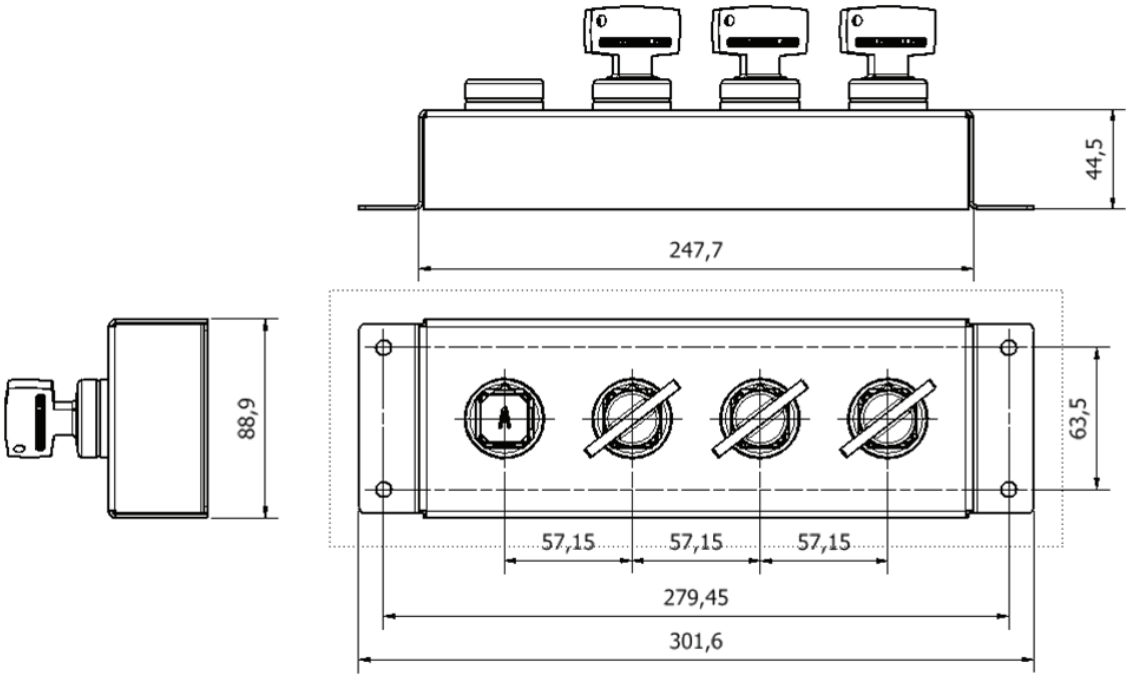


While every effort has been made to ensure the accuracy of the information provided, no liability can be taken for any errors or omission.
Castell Safety International Limited reserves the right to alter specifications and introduce improvements without prior notice.

## Order Information

| | Product Type | 1 | 2 | 3 | 4 | 5 |
|---|---|---|---|---|---|---|
| Part Number | X | - | | - | - | - |
| Example | X | - FS | B | - H | - 1 | / 3 |

| 6 | |
|---|---|
| A1 | Free Key Symbol(s)/keys in |

| 7 | |
|---|---|
| B1 | Trapped Key Symbol(s)/keys out |

| | | |
|---|---|---|
| 1 | **Lock portion type** | FS (1) / Q (1) |
| 2 | **Material** | B = Brass<br>S = Stainless steel |
| 3 | **Mounting** | H = Horizontal<br>V = Vertical |
| 4 | **Number of free keys (keys in)** | please specify |
| 5 | **Number of trapped keys (keys out)** | please specify |
| 6 | **Lock portion symbol(s), free keys - all to be advised separately** | FS (1) up to 3 characters / Q (1) up to 6 characters |
| 7 | **Lock portion symbol(s), trapped keys - all to be advised separately** | FS (1) up to 3 characters / Q (1) up to 6 characters |

(1) **FS - Lock type** Up to 3 characters **Q - Lock type** Up to 6 characters

**Special construction available upon enquiry**

## Accessories

| | Product | Part number |
|---|---|---|
| | Flip Cap | FLIP-S |

## Contact Information

Castell Safety International Ltd.
The Castell Building
217 Kingsbury Road
London, England NW9 9PQ

t: +44 (0) 20 8200 1200
f: +44 (0) 20 8905 9378
e: uksales@castell.com

Castell Safety International Ltd.
Oskar-Jäger-Strasse 137
50825 Köln
Germany

t: +49 (0) 221 1649 794
f: +49 (0) 221 1649 795
e: vertrieb@castell.com

Castell Interlocks Inc.
Suite 800
150 N Michigan Avenue,
Chicago, Illinois 60601
USA

t: +1.312.360.1516
f: +1.312.268.5174
e: ussales@castell.com

Castell Safety China
Building 1, No. 123,
Lane 1165, Jindu Road,
Minhang District,
Shanghai 201108, China.

t: +86 21 61519023
f: +86 21 61519030
e: chinasales@castell.com

While every effort has been made to ensure the accuracy of the information provided, no liability can be taken for any errors or omission.
Castell Safety International Limited reserves the right to alter specifications and introduce improvements without prior notice.

# Y

# Key Exchange Box

User Manual - Original Language Version

Y-FSB-H-1/8

The Y key exchange box is a product designed to enable the release of keys by insertion of an initial key. The Y box is designed for the release of six or more keys, with no upper limit, with the keys being released in any order once the isolation (end key) has been inserted. The need for this type of product usually arises due to there being more keys required than the initial isolation system supplies. The unit will generally be the link between the isolation locks and the access products. The Y box is supplied in an enclosure suitable for surface mounting.

## Operation

Castell Key Exchange Boxes are used in various applications to control multi-door accesses to hazardous areas.

### Y key exchange box, horizontal mount (1 key free - 8 keys trapped)

① **End key is free, front keys are trapped**

② **Insert and turn end key, then turn and release front keys in any order**

③ **End key is trapped, front keys are free**

1. **While the end key is free which is usually used in a power isolation, all (8) front keys are trapped.**

2. **By inserting and turning the free end key in the Y key exchange box, you can release the trapped front keys in any order. Once the first key has been removed, the end key stays trapped. The released keys can be used in the access door locks to gain access to the hazardous area.**

3. **The end key stays trapped until all released keys are replaced and turned to their original position.**

**The Y key exchange box is available with different numbers of front keys and also in a vertical mounting version.**

While every effort has been made to ensure the accuracy of the information provided, no liability can be taken for any errors or omission.
Castell Safety International Limited reserves the right to alter specifications and introduce improvements without prior notice.

## Usage

Y key exchange boxes should be used to allow a safe access to potential hazardous and dangerous areas with one or more access points.

The Y key exchange box is not designed for security purposes, such as a safe or external access to a building.

No hazardous substances were used in the manufacture of this product. The product can be disposed of in standard waste.

## Installation

The Y key exchange box should normally be mounted on the static frame using suitable fasteners. Please refer to the drawing on page 4 for maximum and minimum mounting distance. Y key exchange boxes are avalable in horizontal and vertical mounting versions. Anti vibration pads should be used on machines that generate a high level of vibration

IMPORTANT:
The Y key exchange box should be mounted using anti-tamper fasteners to prevent unauthorised removal.

The Y key exchange box must be installed by a competent and qualified person who has read and understood these instructions. Please retain this document in your technical file.

## Maintenance

Periodic visual checks should be carried out by the site manager/safety officer.
Do not lubricate lock barrel with oil or grease, use CK Dry Powder Graphite if necessary.

In case of defects being detected please contact your nearest Castell Support Department for further actions.
Please see Contact section for contact details.

While every effort has been made to ensure the accuracy of the information provided, no liability can be taken for any errors or omission.
Castell Safety International Limited reserves the right to alter specifications and introduce improvements without prior notice.

## Technical Data

| | |
|---|---|
| **Temperature rating** | Minimum: -40°C [-40°F] ice free for Q & FS type |
| | Maximum: 107°C [224,6°F] for Q type/140°C [284°F] for FS type or 288°C [550°F] upon request |
| **Type of mounting** | surface mount using suitable fasteners |
| **Weight** | Brass: 1 kg for 2 lock portions, add 0,5 kg per additional portion |
| | Stainless steel: 1 kg for 2 lock portions, add 0,5 kg per additional portion |
| **Material** | Brass or stainless steel |
| **MTTF Certification** | Available on request |

## Application

A typical application of the Y key exchange box is machine guarding with more than one access points to the hazardous area.

The key exchange box is used as a part of a safety system, which ensures a machine is shut down, before access to the hazardous area is allowed. The system involves a KS key switch for the electrical supply and typically more than one AI access interlock for part body access.

The removal of the isolation key from the key switch isolates the electrical supply to the machine. This key is taken to the Y key exchange box to release the trapped keys. The released keys are used to gain access through the AI door interlocks.

The machine cannot be restarted until all keys are returned to the Y key exchange box and the end key (power isolation key) is removed and taken to the KS key switch.

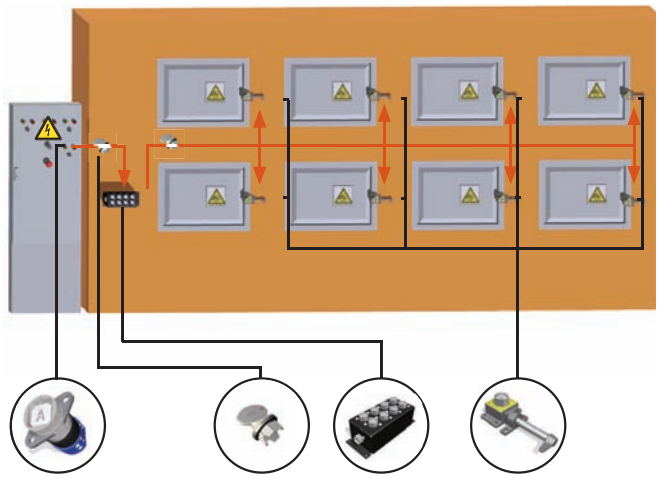

## EC-Declaration

We, the manufacturers, declare that the components, detailed herein and placed on the market, comply with all the essential health and safety requirements applying to them.

Empowered signatory:

Mr T.C. Whelan
Managing Director

While every effort has been made to ensure the accuracy of the information provided, no liability can be taken for any errors or omission.
Castell Safety International Limited reserves the right to alter specifications and introduce improvements without prior notice.

## Drawing

Dimensions:
**in mm**

***Note:*** *For safe mounting, use security screws*

Y key exchange box, horizontal mount

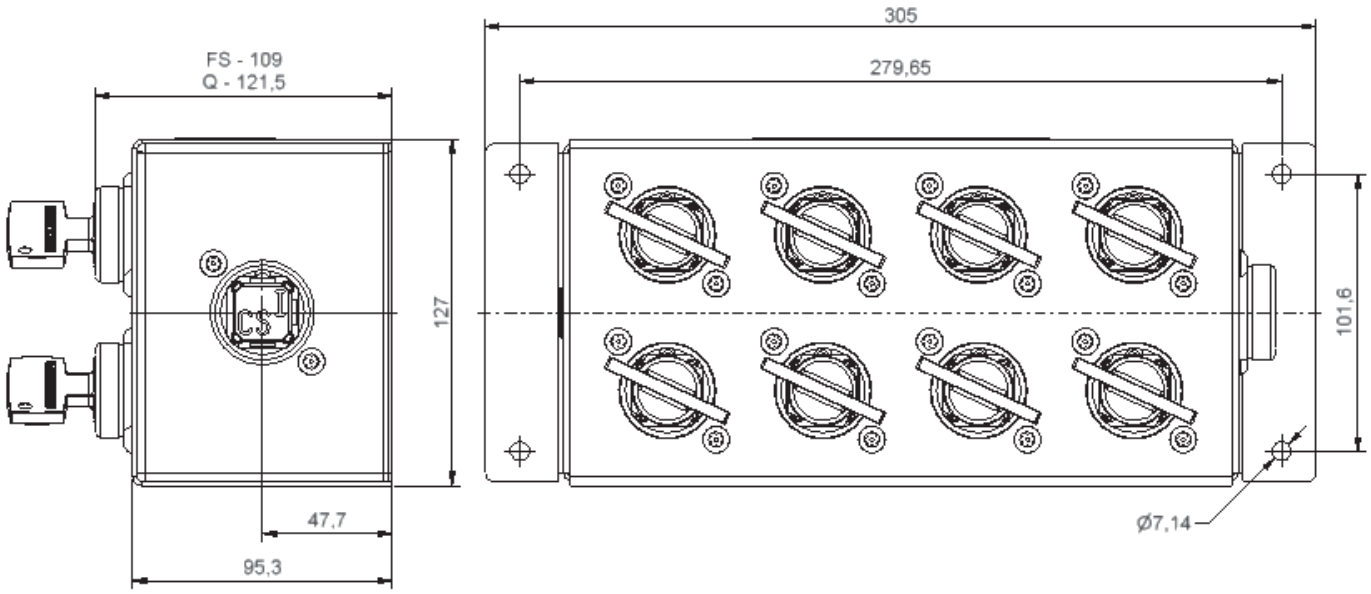


While every effort has been made to ensure the accuracy of the information provided, no liability can be taken for any errors or omission.
Castell Safety International Limited reserves the right to alter specifications and introduce improvements without prior notice.

## Order Information

| | Product Type | 1 | 2 | 3 | 4 | 5 |
|---|---|---|---|---|---|---|
| Part Number | Y | - | | - | - | - |
| Example | Y | - FS | B | - H | - 1 | / 8 |

| 6 | |
|---|---|
| A | End Lock Symbol |

| 7 | |
|---|---|
| B | Front Lock Symbol(s) |

| | | |
|---|---|---|
| 1 | **Lock portion type** | FS (1) / Q (1) |
| 2 | **Material** | B = Brass<br>S = Stainless steel |
| 3 | **Mounting** | H = Horizontal<br>V = Vertical |
| 4 | **Number of Free Keys** | 1 (standard) |
| 5 | **Number of Trapped Keys** | please specify |
| 6 | **Lock portion symbol - End Key** | FS (1) up to 3 characters / Q (1) up to 6 characters |
| 7 | **Lock portion symbol(s) - Front Key(s), all to be advised separately** | FS (1) up to 3 characters / Q (1) up to 6 characters |

(1) **FS - Lock type** Up to 3 characters **Q - Lock type** Up to 6 characters

**Special construction available upon enquiry**

## Accessories

| | Product | Part number |
|---|---|---|
| | Flip Cap | FLIP-S |

## Contact Information

Castell Safety International Ltd.
The Castell Building
217 Kingsbury Road
London, England NW9 9PQ

t: +44 (0) 20 8200 1200
f: +44 (0) 20 8905 9378
e: uksales@castell.com

Castell Safety International Ltd.
Oskar-Jäger-Strasse 137
50825 Köln
Germany

t: +49 (0) 221 1649 794
f: +49 (0) 221 1649 795
e: vertrieb@castell.com

Castell Interlocks Inc.
Suite 800
150 N Michigan Avenue,
Chicago, Illinois 60601
USA

t: +1.312.360.1516
f: +1.312.268.5174
e: ussales@castell.com

Castell Safety China
Building 1, No. 123,
Lane 1165, Jindu Road,
Minhang District,
Shanghai 201108, China.

t: +86 21 61519023
f: +86 21 61519030
e: chinasales@castell.com

While every effort has been made to ensure the accuracy of the information provided, no liability can be taken for any errors or omission.
Castell Safety International Limited reserves the right to alter specifications and introduce improvements without prior notice.

# Key Exchange Box

User Manual - Original Language Version

Z-FSB-H-1/4

The Z key exchange box is designed to enable the release of keys by insertion of an initial key. The Z box is suitable for releasing up to five keys in any order once the isolation (end key) has been inserted. The requirement for this type of product usually arises due to there being more keys required than the initial isolation system supplies. The unit will generally be the link between the isolation locks and the access products. The Z box is supplied in an enclosure suitable for surface mounting.

## Operation

Castell Key Exchange Boxes are used in various applications to control multi-door accesses to hazardous areas.

**Z key exchange box, horizontal mount (1 key free - 3 keys trapped)**

① **End key is free, 4 front keys trapped**

② **Insert and turn end key, then turn and release front keys in any order**

③ **End key is trapped, 4 front keys are free**

1. **While the isolation key is free, this is usually trapped in the power isolator, the access keys, positioned on the front, are trapped.**
2. **By inserting the isolation key the access keys are released in any order. Once the first access key has been removed the isolation key will be trapped. The access keys can then be used to access the protected area via access locks.**
3. **The isolation key remains trapped until all the access keys have been returned**

**The Z key exchange box is available with up to five front keys and also in a vertical mounting version.**

While every effort has been made to ensure the accuracy of the information provided, no liability can be taken for any errors or omission.
Castell Safety International Limited reserves the right to alter specifications and introduce improvements without prior notice.

## Usage

Z key exchange boxes should be used to allow a safe access to potential hazardous and dangerous areas with one or more access points.

The Z key exchange box is not designed for security purposes, such as a safe or external access to a building.

No hazardous substances were used in the manufacture of this product. The product can be disposed of in standard waste.

## Installation

The Z key exchange box should normally be mounted on the static frame using suitable fasteners. Please refer to the drawing on page 4 for maximum and minimum mounting distance. The Z key exchange boxes are avalable in horizontal and vertical mounting versions. Anti vibration pads should be used on machines that generate a high level of vibration

IMPORTANT:
The Z key exchange box should be mounted using anti-tamper fasteners to prevent unauthorised removal.

The Z key exchange box must be installed by a competent and qualified person who has read and understood these instructions. Please retain this document in your technical file.

## Maintenance

Periodic visual checks should be carried out by the site manager/safety officer.
Do not lubricate lock barrel with oil or grease, use CK Dry Powder Graphite if necessary.

In case of defects being detected please contact your nearest Castell Support Department for further actions.
Please see Contact section for contact details.

While every effort has been made to ensure the accuracy of the information provided, no liability can be taken for any errors or omission.
Castell Safety International Limited reserves the right to alter specifications and introduce improvements without prior notice.

## Technical Data

| | |
|---|---|
| **Temperature rating** | Minimum: -40°C [-40°F] ice free for Q & FS type |
| | Maximum: 107°C [224,6°F] for Q type/140°C [284°F] for FS type or 288°C [550°F] upon request |
| **Type of mounting** | surface mount using suitable fasteners |
| **Weight** | Brass: 1 kg for 2 lock oprtions, add 0,5 kg per additional portion |
| **Material** | Brass |
| **MTTF Certification** | Available on request |

## Application

A typical application of the Z Key Exchange Box is machine guarding with one or more access points to the hazardous area.

The key exchange box is used as a part of a safety system, which ensures a machine is shut down, before access to the hazardous area is allowed. The system involves a KS key switch for the electrical supply and typically more than one AIE access interlocks for full body access.

The removal of the isolation key from the key switch isolates the electrical supply to the machine. This key is taken to the Z key exchange box to release the trapped keys. The released keys are used to gain access through the AIE access interlocks.

The machine cannot be restarted until all keys are returned to the Z key exchange box and the power isolation key is released and replaced in the KS key switch.

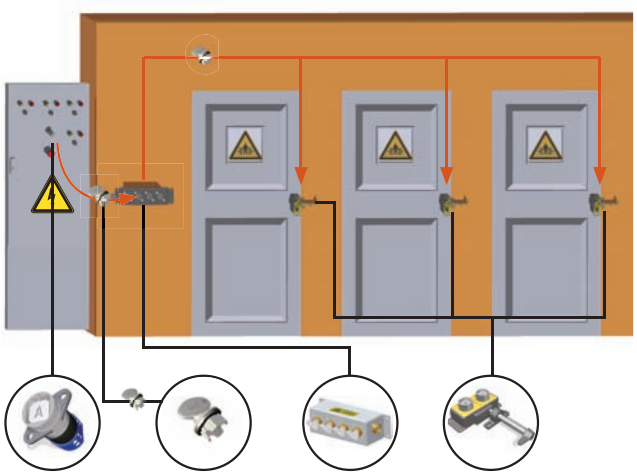

## EC-Declaration

We, the manufacturers, declare that the components, detailed herein and placed on the market, comply with all the essential health and safety requirements applying to them.

Empowered signatory:

Mr T.C. Whelan
Managing Director

While every effort has been made to ensure the accuracy of the information provided, no liability can be taken for any errors or omission.
Castell Safety International Limited reserves the right to alter specifications and introduce improvements without prior notice.

## Drawing

Dimensions:
**in mm**

***Note:*** *For safe mounting, use security screws*

Z key exchange box, horizontal mount

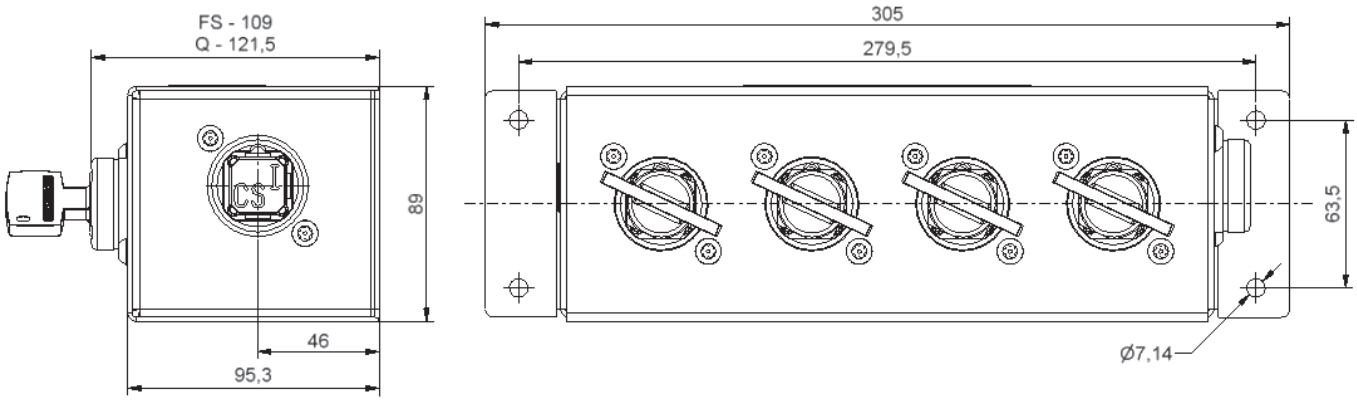


While every effort has been made to ensure the accuracy of the information provided, no liability can be taken for any errors or omission.
Castell Safety International Limited reserves the right to alter specifications and introduce improvements without prior notice.

## Order Information

| | Product Type | 1 | 2 | 3 | 4 | 5 |
|---|---|---|---|---|---|---|
| Part Number | Z | - | | - | - | - |
| Example | Z | - FS | B | - H | - 1 | / 3 |

| 6 | |
|---|---|
| A | End Lock Symbol |

| 7 | |
|---|---|
| B | Front Lock Symbol(s) |

| | | |
|---|---|---|
| 1 | **Lock portion type** | FS (1) / Q (1) |
| 2 | **Material** | B = Brass (standard) |
| 3 | **Mounting** | H = Horizontal<br>V = Vertical |
| 4 | **Number of End Keys** | 1 (standard) |
| 5 | **Number of Front Keys** | please specify |
| 6 | **Lock portion symbol - End Key** | FS (1) up to 3 characters / Q (1) up to 6 characters |
| 7 | **Lock portion symbol(s) - Front Key(s), all to be advised separately** | FS (1) up to 3 characters / Q (1) up to 6 characters |

(1) **FS - Lock type** Up to 3 characters **Q - Lock type** Up to 6 characters

## Accessories

**Special construction available upon enquiry**

| | Product | Part number |
|---|---|---|
| | Flip Cap | FLIP-S |

## Contact Information

Castell Safety International Ltd.
The Castell Building
217 Kingsbury Road
London, England NW9 9PQ

t: +44 (0) 20 8200 1200
f: +44 (0) 20 8905 9378
e: uksales@castell.com

Castell Safety International Ltd.
Oskar-Jäger-Strasse 137
50825 Köln
Germany

t: +49 (0) 221 1649 794
f: +49 (0) 221 1649 795
e: vertrieb@castell.com

Castell Interlocks Inc.
Suite 800
150 N Michigan Avenue,
Chicago, Illinois 60601
USA

t: +1.312.360.1516
f: +1.312.268.5174
e: ussales@castell.com

Castell Safety China
Building 1, No. 123,
Lane 1165, Jindu Road,
Minhang District,
Shanghai 201108, China.

t: +86 21 61519023
f: +86 21 61519030
e: chinasales@castell.com

While every effort has been made to ensure the accuracy of the information provided, no liability can be taken for any errors or omission.
Castell Safety International Limited reserves the right to alter specifications and introduce improvements without prior notice.